AVALUNET SYSTEMS

ACW81
TECHNICAL MANUAL

ALUNET SYSTEMS

01 Profiles & Accessories

ACW81

ALUNET SYSTEMS

ACW81.111	Slim flush Frame
Weight	1.36kg/m
Bar Length	6.5m
Pack Qty.	2 Pieces
Pack Weight (gross - kg)	19.0

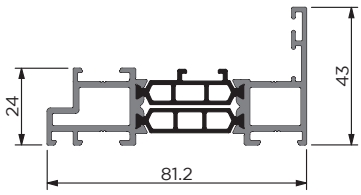

ACW81.112	Standard flush Frame
Weight	1.58kg/m
Bar Length	6.5m
Pack Qty.	2 Pieces
Pack Weight (gross - kg)	21.9

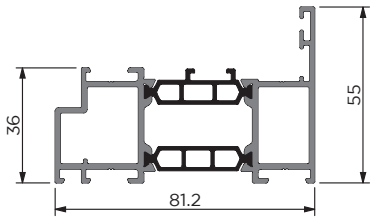

ACW81.221	Sash
Weight	1.18kg/m
Bar Length	6.5m
Pack Qty.	4 Pieces
Pack Weight (gross - kg)	32.2

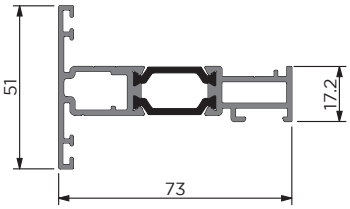

ACW81.442	Transom Cleat Fix
Weight	1.68kg/m
Bar Length	6.5m
Pack Qty.	2 Pieces
Pack Weight (gross - kg)	23.4

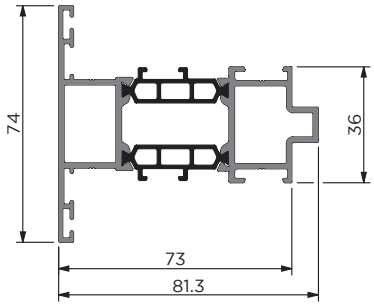

ACW81.441	Transom Screw Fix
Weight	1.82kg/m
Bar Length	6.5m
Pack Qty.	2 Pieces
Pack Weight (gross - kg)	25.2

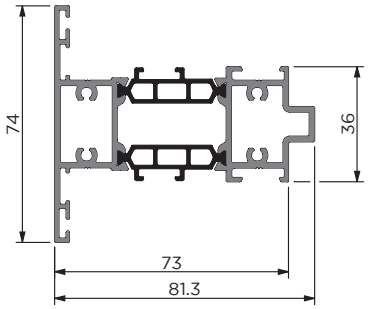

ACW81.331	Reverse rebate Adaptor
Weight	1.24kg/m
Bar Length	6.5m
Pack Qty.	4 Pieces
Pack Weight (gross - kg)	33.9

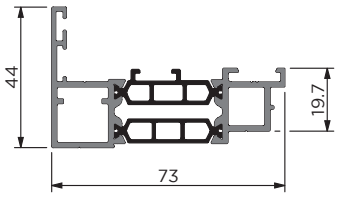

ACW81

ALUNET SYSTEMS

ACW81.444	SlimTransom Cleat Fix
Weight	1.4kg/m
Bar Length	6.5m
Pack Qty.	4 Pieces
Pack Weight (gross - kg)	38.4

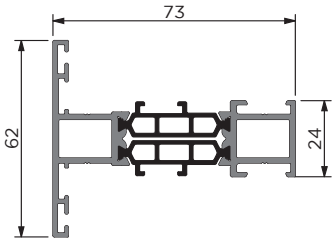

ACW81.443	Slim Transom screw Fix
Weight	1.49kg/m
Bar Length	6.5m
Pack Qty.	2 Pieces
Pack Weight (gross - kg)	20.9

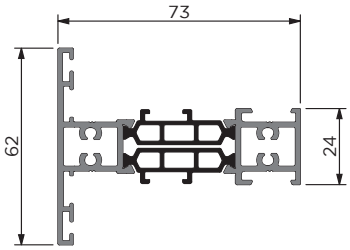

ACW81.551	Bead 28 DGU
Weight	0.359kg/m
Bar Length	6.5m
Pack Qty.	12 Pieces
Pack Weight (gross - kg)	30.7

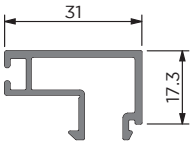

ACW81.552	Bead 44 DGU
Weight	0.256kg/m
Bar Length	6.5m
Pack Qty.	18 Pieces
Pack Weight (gross - kg)	30.7

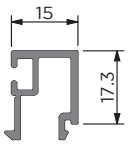

ACW81.776	Corner Mullion
Weight	1.88kg/m
Bar Length	6.5m
Pack Qty.	2 Pieces
Pack Weight (gross - kg)	25.9

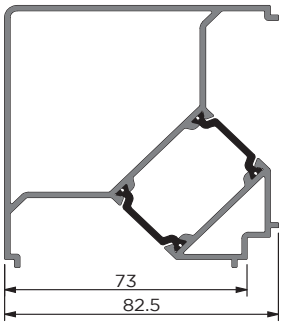

ACW81.775	Rotary Clip
Weight	0.212kg/m
Bar Length	6.5m
Pack Qty.	12 Pieces
Pack Weight (gross - kg)	17.1

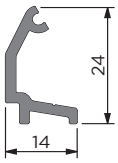

ACW81

ALUNET SYSTEMS

ACW81.661	Coupler
Weight - kg/m	1.097
Bar Length	6.5m
Pack Qty.	2 Pieces
Pack Weight (gross - kg)	30.2

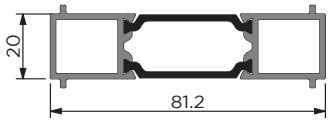

ACW81.662	Add on
Weight	1.5kg/m
Bar Length	6.5m
Pack Qty.	2 Pieces
Pack Weight (gross - kg)	21.5

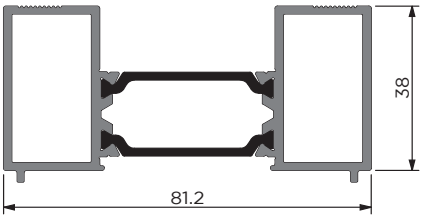

ACW81.771	Corner post
Weight	2.04kg/m
Bar Length	6.5m
Pack Qty.	2 Pieces
Pack Weight (gross - kg)	28.0

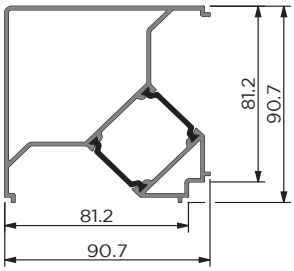

ACW81.772	Baypole
Weight	1.872kg/m
Bar Length	6.5m
Pack Qty.	2 Pieces
Pack Weight (gross - kg)	26.7

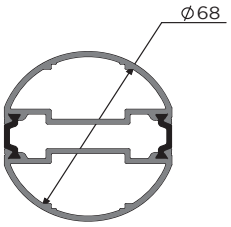

ACW81.773	Baypole Clip Internal
Weight - kg/m	0.199
Bar Length	6.5m
Pack Qty.	12 Pieces
Pack Weight (gross - kg)	17.1

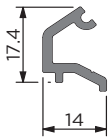

ACW81.774	Baypole Clip External
Weight - kg/m	0.281
Bar Length	6.5m
Pack Qty.	12 Pieces
Pack Weight (gross - kg)	23.8

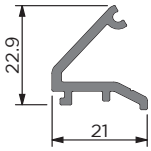

ACW81

ALUNET SYSTEMS

BF73.0402	Cill - 90mm
Weight - kg/m	1.45
Bar Length	6.5m
Pack Qty.	2 Pieces
Pack Weight (gross - kg)	19.5

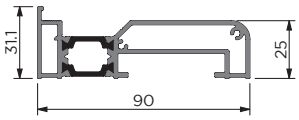

BF73.0403	Cill - 190mm
Weight - kg/m	2.69
Bar Length	6.5m
Pack Qty.	2 Pieces
Pack Weight (gross - kg)	36

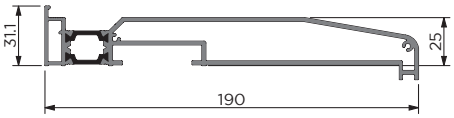

BF73.0404	Cill - 230mm
Weight - kg/m	3.12
Bar Length	6.5m
Pack Qty.	2 Pieces
Pack Weight (gross - kg)	41.7

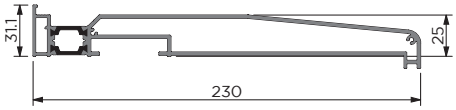

BF73.0405	Cill - 150mm
Weight - kg/m	2.25
Bar Length	6.5m
Pack Qty.	2 Pieces
Pack Weight (gross - kg)	30.1

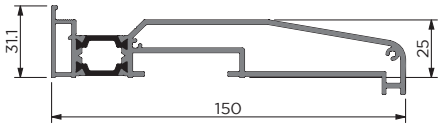

ACW81.113	Slim Outer Frame
Weight - kg/m	1.27
Bar Length	6.5m
Pack Qty.	4 Pieces
Pack Weight (gross - kg)	34.9

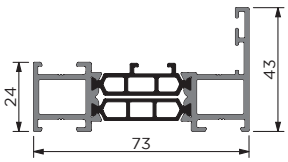

ACW81.114	Standard Outer Frame
Weight - kg/m	1.49
Bar Length	6.5m
Pack Qty.	2 Pieces
Pack Weight (gross - kg)	20.7

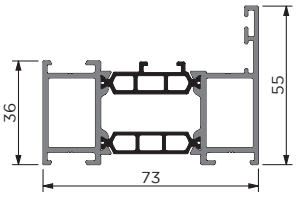

ACW81.445	Transom
Weight - kg/m	1.76
Bar Length	6.5m
Pack Qty.	2 Pieces
Pack Weight (gross - kg)	24.4

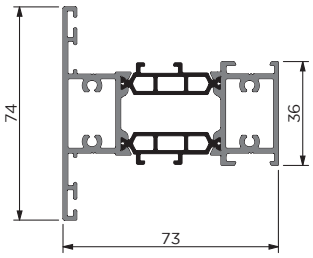

ACW81.446	Transom
Weight - kg/m	1.61
Bar Length	6.5m
Pack Qty.	2 Pieces
Pack Weight (gross - kg)	22.5

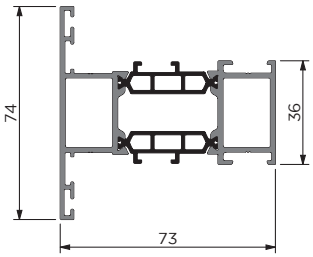

ACW81

ALUNET SYSTEMS

ACW584	Sash & Frame Gasket
Weight - kg/m	0.042
Roll Length	300m

DBA1-131	Optional intermediate Gasket
Weight - kg/m	0.08
Roll Length	100

DBA1-135	Captive glazing Gasket
Weight - kg/m	0.066
Roll Length	250m

DBA1-136	Wedge glazing Gasket
Weight - kg/m	0.073
Roll Length	150m

DBA1-139	Wedge glazing Gasket
Weight - kg/m	0.08
Roll Length	150m

ACW81.893WH RAL9016
ACW81.893BL RAL9005

Drainage Cap
Colour - Black/White

ACW81.01974

Friction stay support

ACW81.895

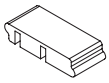

Support
Colour - Black

ACW81.896

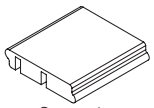

Support
Colour - Black

ACW585

EPDM Foam Chord
100m Roll

ACW81.891

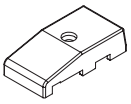

Run Up Block

ACW81.897

Frame Connector

BF73.5402.9005 90mm Cill Endcap Kit RAL9005
BF73.5402.9016 90mm Cill Endcap Kit RAL9016
BF73.5402.7016 90mm Cill endcap Kit RAL7016

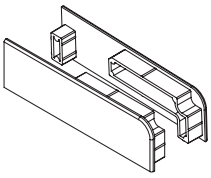

BF73.5403.9005 190mm Cill Endcap Kit RAL9005
BF73.5403.9016 190mm Cill Endcap Kit RAL9016
BF73.5403.7016 190mm Cill endcap Kit RAL7016

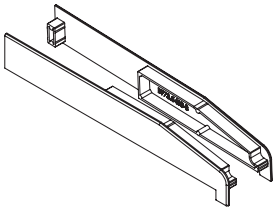

BF73.5404.9005 230mm Cill Endcap Kit RAL9005
BF73.5404.9016 230mm Cill Endcap Kit RAL9016
BF73.5404.7016 230mm Cill endcap Kit RAL7016

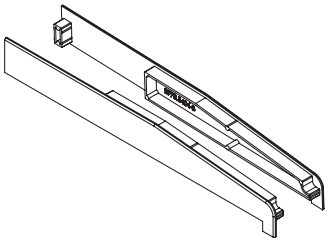

BF73.5405.9005 150mm Cill Endcap Kit RAL9005
BF73.5405.9016 150mm Cill Endcap Kit RAL9016
BF73.5405.7016 90mm Cill endcap Kit RAL7016

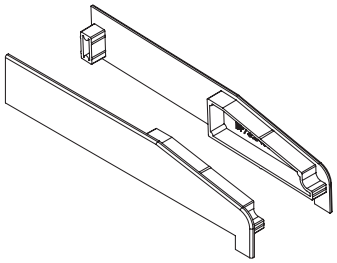

ACW81

ALUNET SYSTEMS

ACW81 Jig codes & usage

WIN.JIG1
For Sash profile ACW81.221

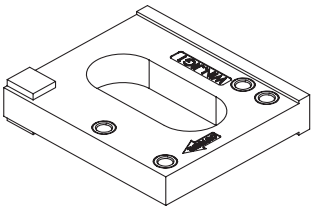

WIN.JIG2
For Frame profile ACW81.111 & ACW81.112

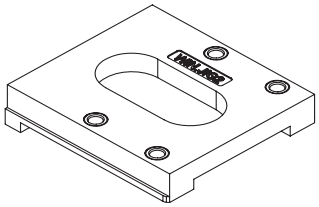

WIN.JIG3
For Adaptor profile ACW81.331

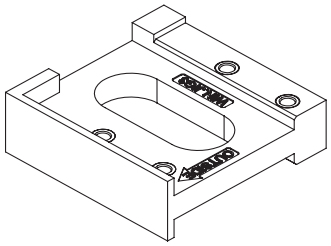

WIN.JIG4
For fitting Transom profile ACW81.441 to Frame profiles ACW81.111 & ACW81.112

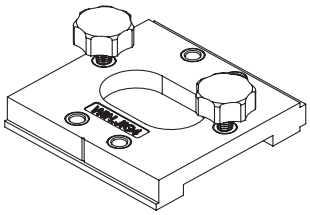

WIN.JIG5
For Transom profile ACW81.442

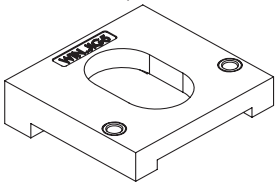

WIN.JIG6
For fitting ACW81.443 transom profile to Sash profile ACW81.221

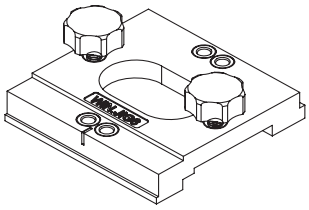

WIN.JIG7
For Glazing bead profile ACW81.551 espag fixing

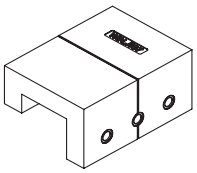

WIN.JIG9
For Glazing bead profile ACW81.552 espag fixing

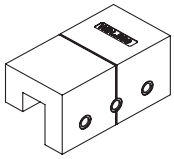

ACW81

ALUNET SYSTEMS

ACW81.884

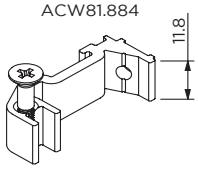

For Sash - Transom Profiles
ACW81.221 & ACW81.444

ACW81.887

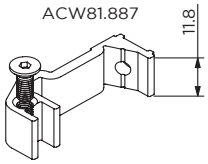

For Sash - Transom Profiles
ACW81.221 & ACW81.444

ACW81.885

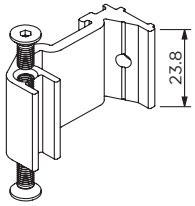

For Frame - Transom Profiles
ACW81.112 & ACW81.442, ACW81.446

ACW81.881

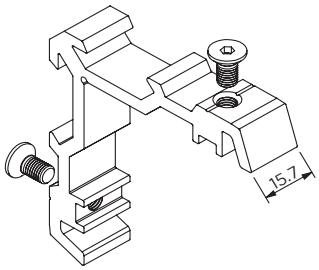

For the Frame & Reverse Adaptor Profiles
ACW81.111, ACW81.113 & ACW81.331

ACW81.882

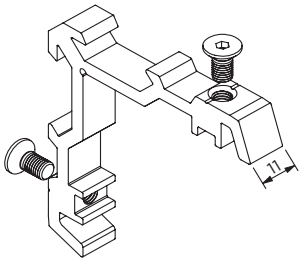

For the Sash & Reverse Adaptor Profiles
ACW81.221 & ACW81.331

ACW81.883

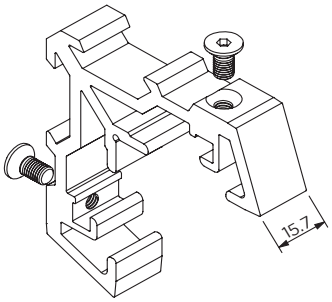

For the Frame Profile ACW81.112 & ACW81.114

ACW81.886

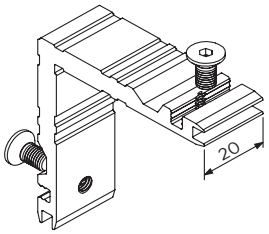

For the Sash Profile ACW81.221

ACW81.894

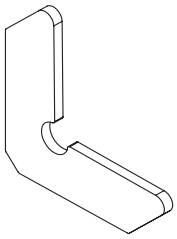

For the Frame Profiles ACW81.111, ACW81.112, ACW81.113
ACW81.114 & Sash Profile ACW81.221,
Adaptor Profile ACW81.331

ACW81

ALUNET SYSTEMS

Crimp Cleats

ACW81.881CRI
Crimp Cleat

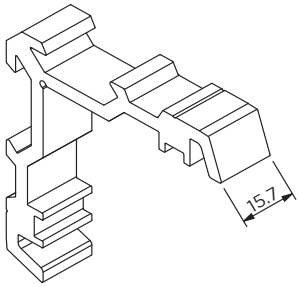

For the Frame & Reverse Adaptor Profiles
ACW81.111, ACW81.113 & ACW81.331

ACW81.882CRI
Crimp Cleat

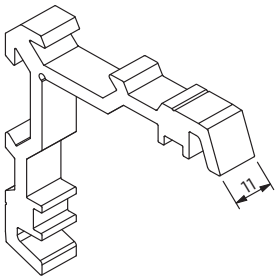

For the Sash & Reverse Adaptor Profiles
ACW81.221 & ACW81.331

ACW81.883CRI
Crimp Cleat

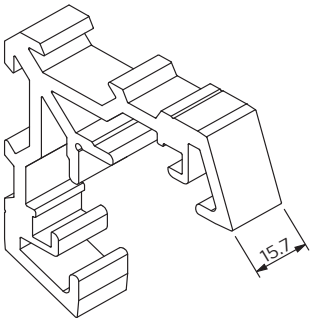

For the Frame Profile ACW81.112
& ACW81.114

ACW81.886CRI
Crimp Cleat

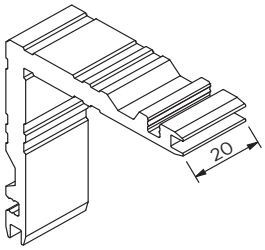

For the Sash Profile ACW81.221

ALUNET SYSTEMS

02 Typical Cross Section Details

ACW81

ALUNET SYSTEMS

Typical Window Styles

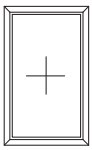

Fixed light
Internally glazed

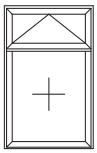

Top hung sash
Internally glazed fixed
light

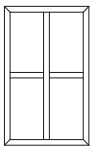

Fixed light
with transom & mullion
Internally glazed

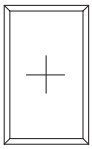

Fixed light
Externally glazed

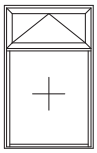

Top hung sash
Externally glazed fixed
light

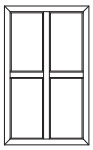

Fixed light
with transom & mullion
Externally glazed

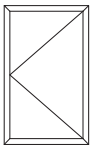

Side Hung
Internally glazed

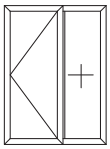

Side hung sash
Internally glazed fixed
light

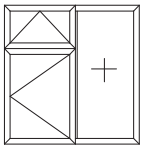

Top/side light
with transom
Fixed light
Internally glazed

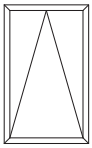

Top Hung
Internally glazed

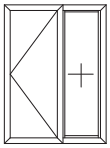

Side hung sash
Externally glazed fixed
light

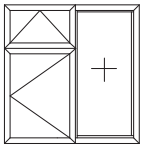

Top/side light sash
with transom
Fixed light
Externally glazed

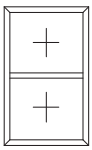

Fixed light with transom
Internally glazed

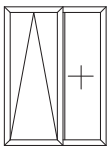

Top hung sash
Internally glazed fixed
light

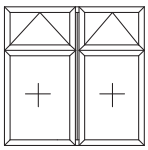

Top hung sash
with transom
Fixed light
Internally glazed

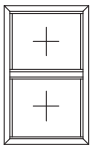

Fixed light with transom
Externally glazed

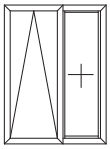

Top hung sash
Externally glazed fixed
light

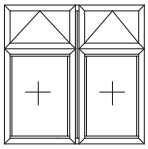

Top hung sash
with transom
Fixed light
Externally glazed

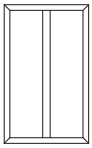

Fixed light with mullion
Internally glazed

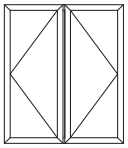

Double side hung sash
with mullion
Internally glazed

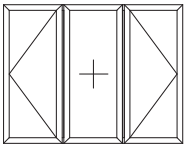

Double side hung
sash with mullions
Internally glazed
fixed light

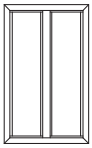

Fixed light with mullion
Externally glazed

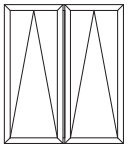

Double top hung sash
with mullion
Internally glazed

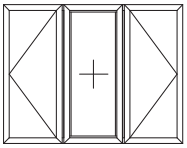

Double side hung
sash with mullions
ExInternally glazed
fixed light

NOTE - FIXED LIGHT CAN BE REPLACED BY DUMMY SASH IF PREFERRED

ACW81

ALUNET SYSTEMS

Glazing bead options

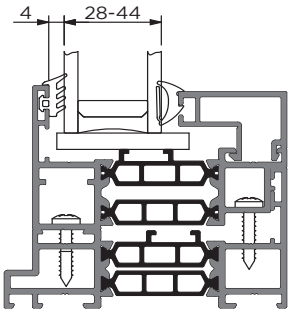

Internally Glazed Fixed Light			
GASKETS		DGU Thickness	Glazing Bead
DBA1-135	DBA1-136	28	ACW81.551
		44	ACW81.552

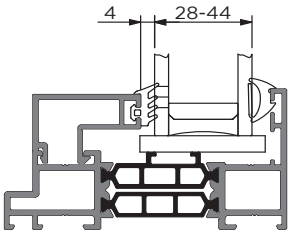

Externally Glazed Fixed Light			
Gaskets		DGU Thickness	Glazing Bead
DBA1-135	DBA1-136	28	ACW81.551
	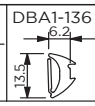	44	ACW81.552

For the Frame Profiles ACW81.111, ACW81.112
ACW81.113, ACW81.114
Transom Profiles ACW81.441, ACW81.442
ACW81.443, ACW81.444, ACW81.445, ACW81.446
Adaptor Profile ACW81.331

ACW81

ALUNET SYSTEMS

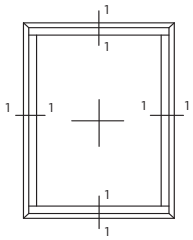

Slim Flush frame - Fixed light externally glazed

1-1

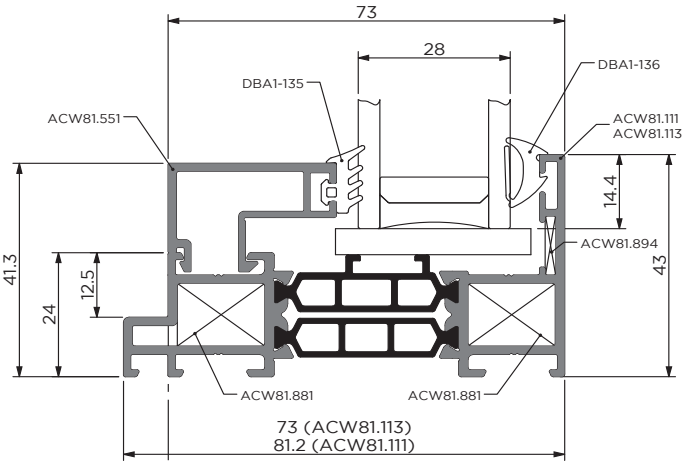

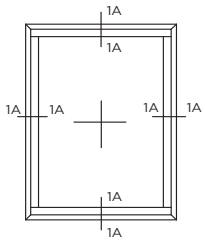

Standard Flush frame - Fixed light externally glazed

1A-1A

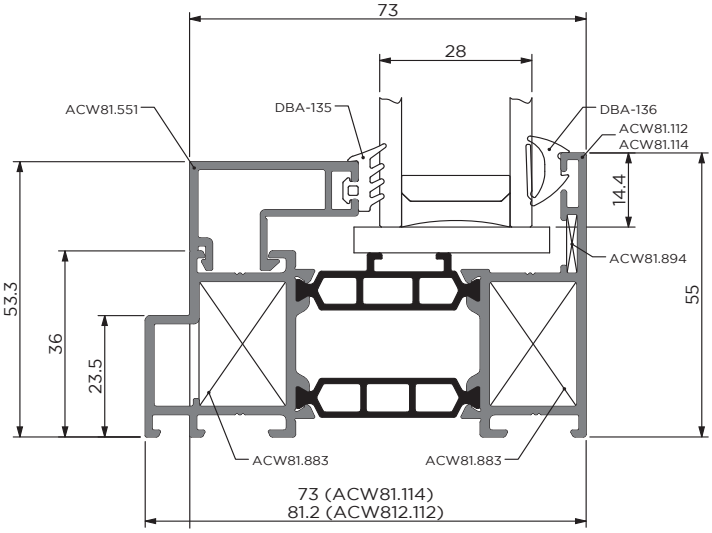

ACW81

ALUNET SYSTEMS

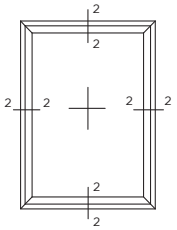

Fixed light - internally glazed

2-2

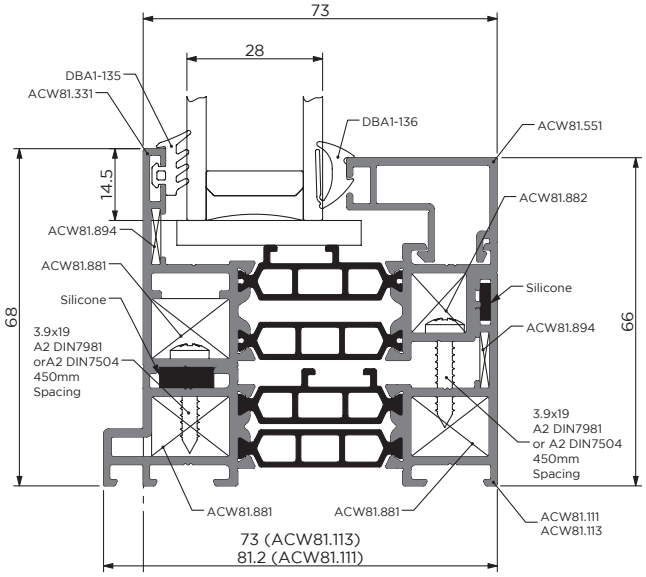

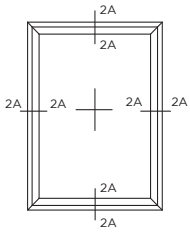

2A-2A

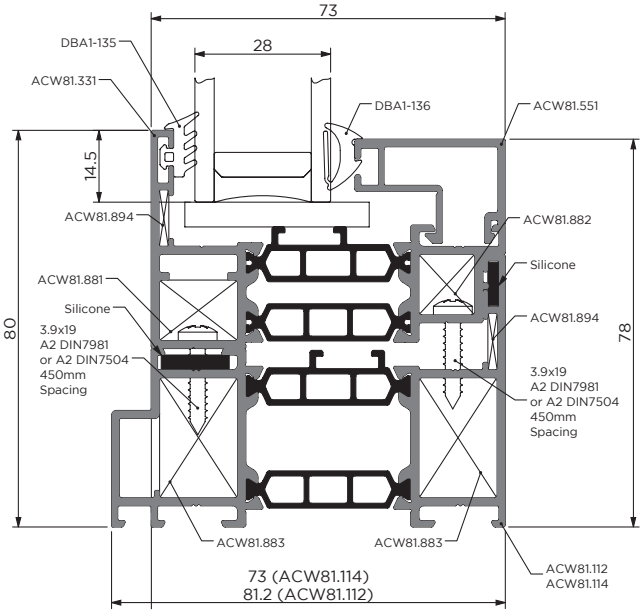

ACW81

ALUNET SYSTEMS

Top hung/Side hung

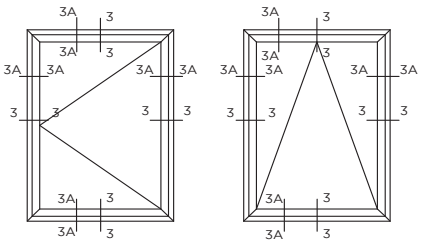

3-3

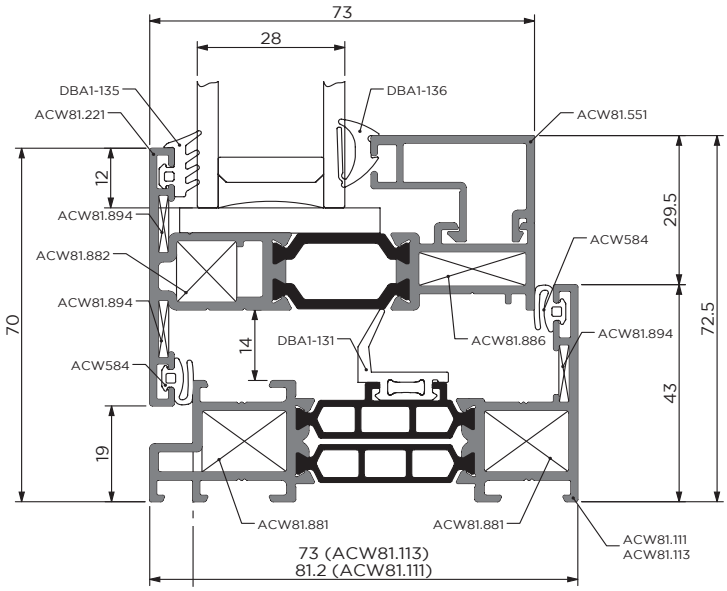

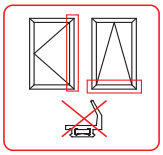

3A-3A

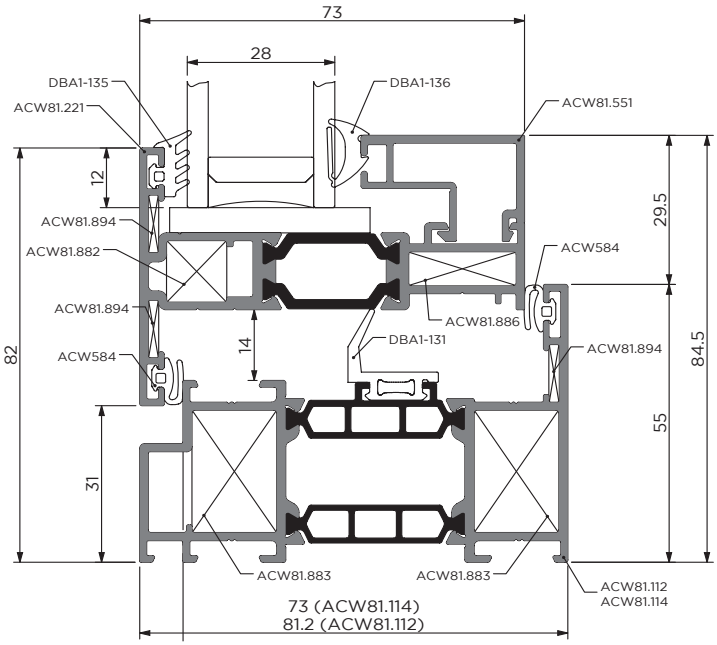

ACW81

ALUNET SYSTEMS

Open with fixed internally glazed

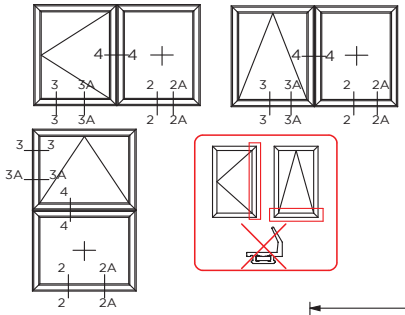

4-4

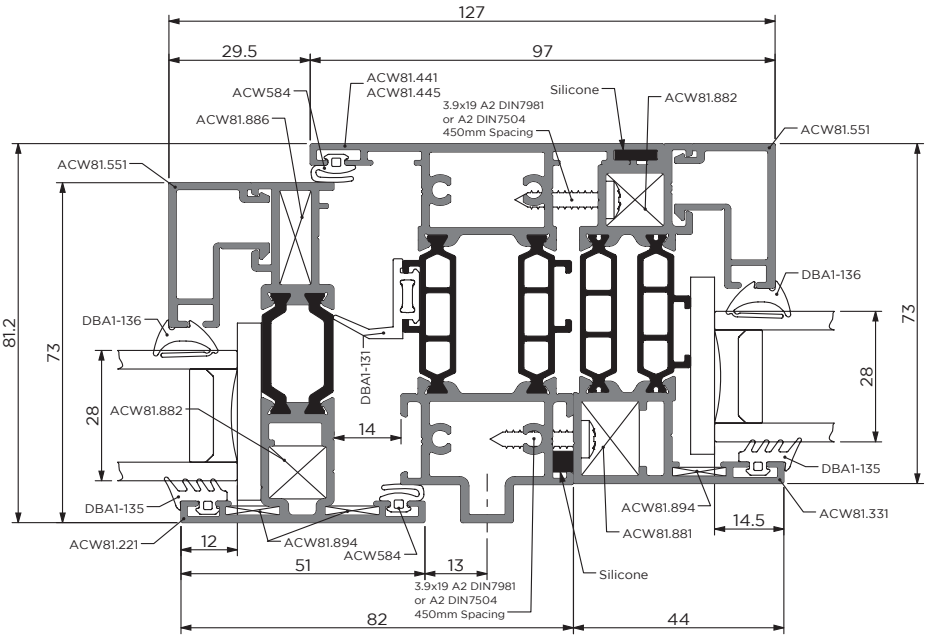

ACW81

ALUNET SYSTEMS

Open with Fixed externally glazed

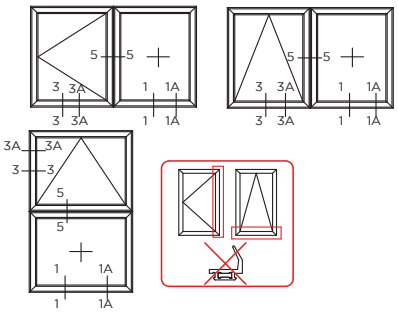

5-5

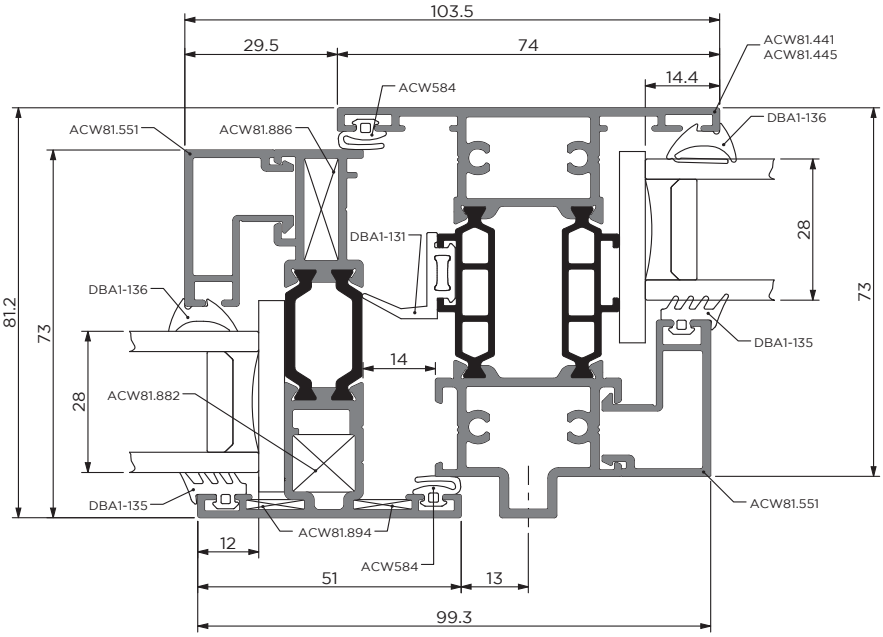

ACW81

ALUNET SYSTEMS

Open - Open. Side or Top Hung

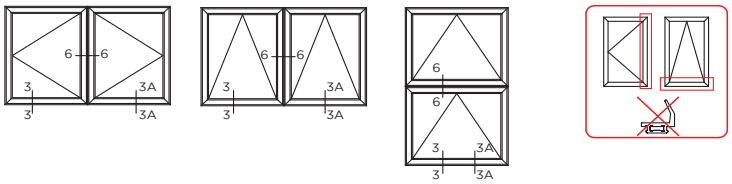

6-6

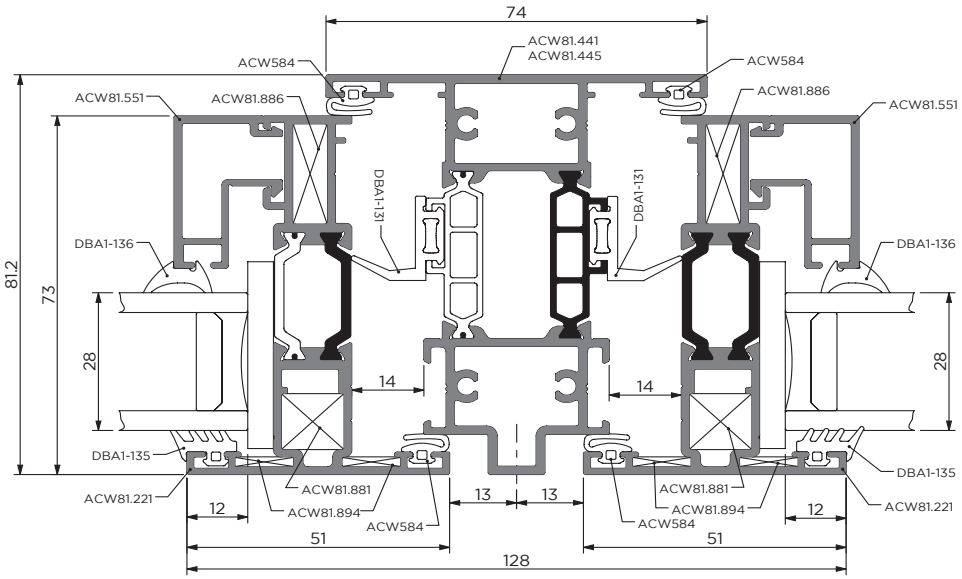

ACW81

ALUNET SYSTEMS

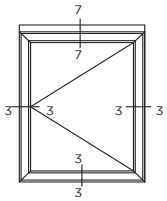

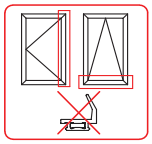

Open with Add on
Slim flush / slim standard frame
7-7

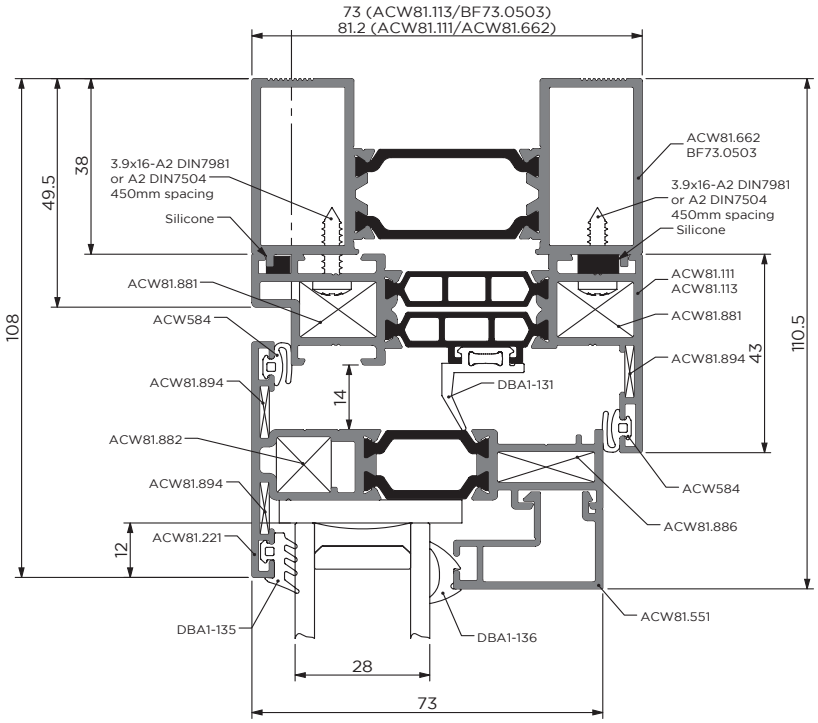

Fixed light (external glazed)with Add on
Slim flush / slim standard frame
7A-7A

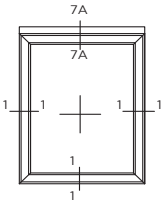

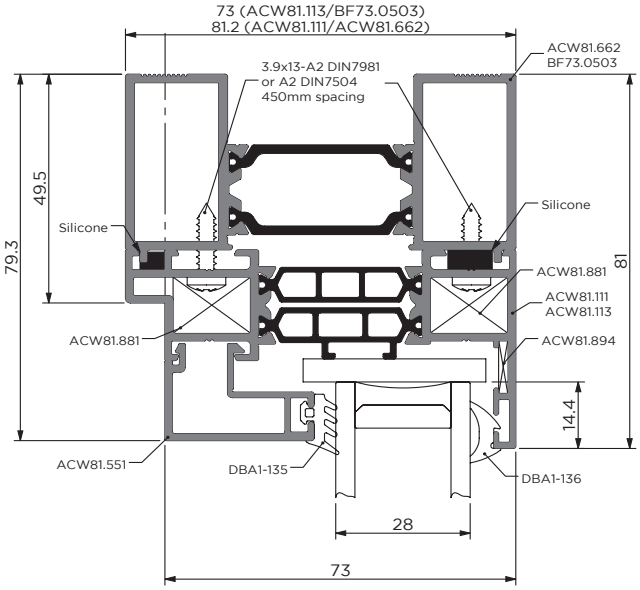

02.09

ACW81

ALUNET SYSTEMS

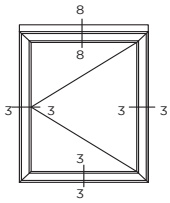

Opening light with add-on slim flush / slim standard frame

8-8

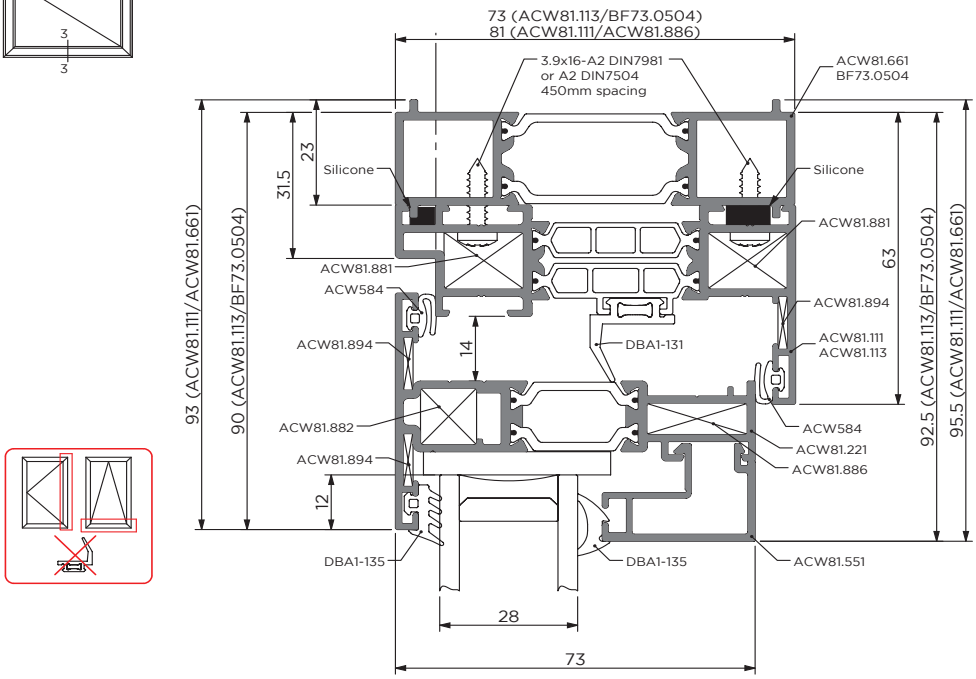

Fixed light with add-on slim flush / slim standard frame

8A-8A

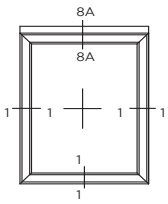

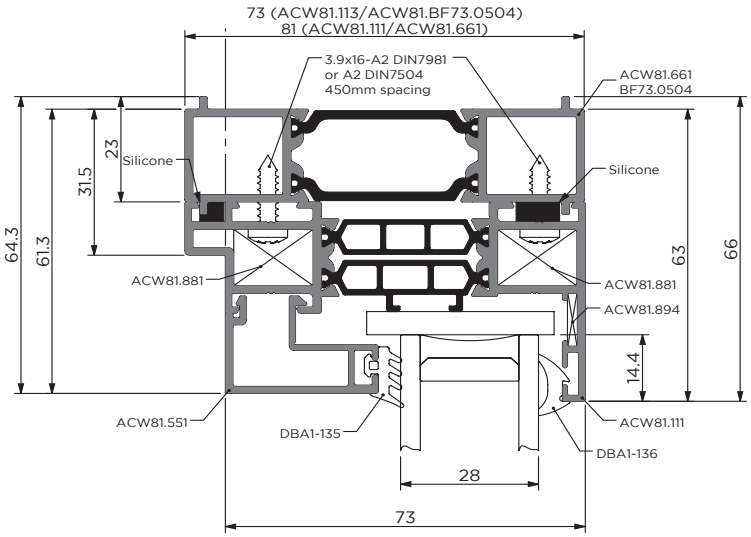

ACW81

ALUNET SYSTEMS

Open light with add-on
Standard flush / standard frame

10-10

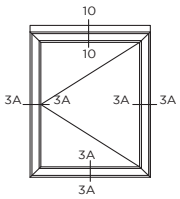

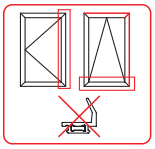

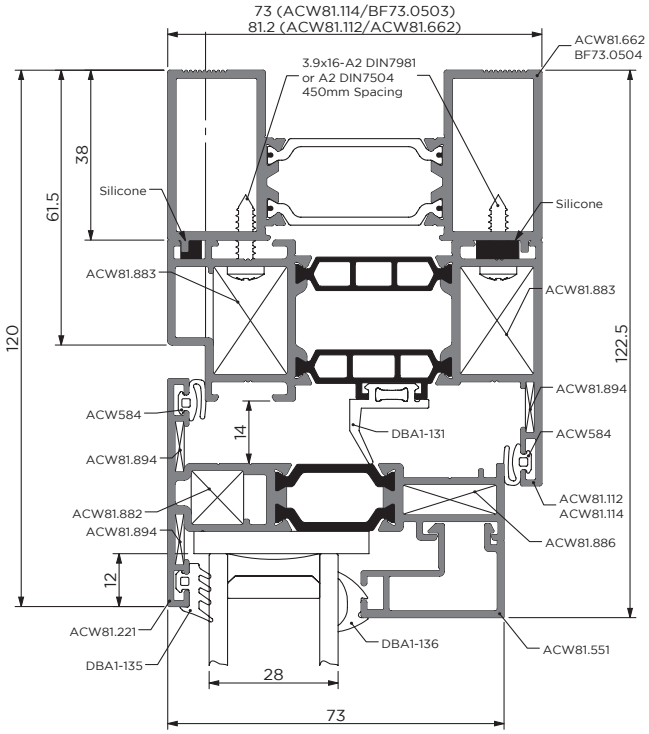

Fixed light - externally glazed with add-on
flush standard / standard frame

10A-10A

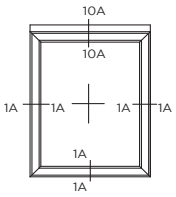

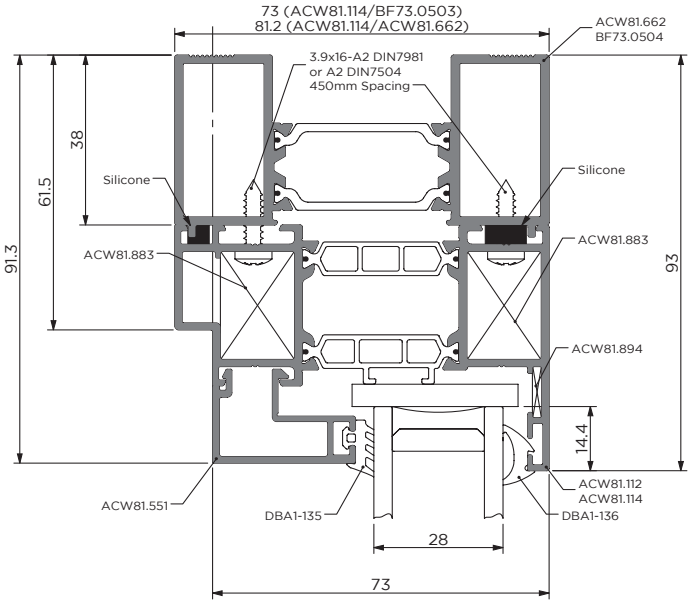

ACW81

ALUNET SYSTEMS

Individual Fixed light-fixed light - externally glazed joined slim flush / slim standard frame

11-11

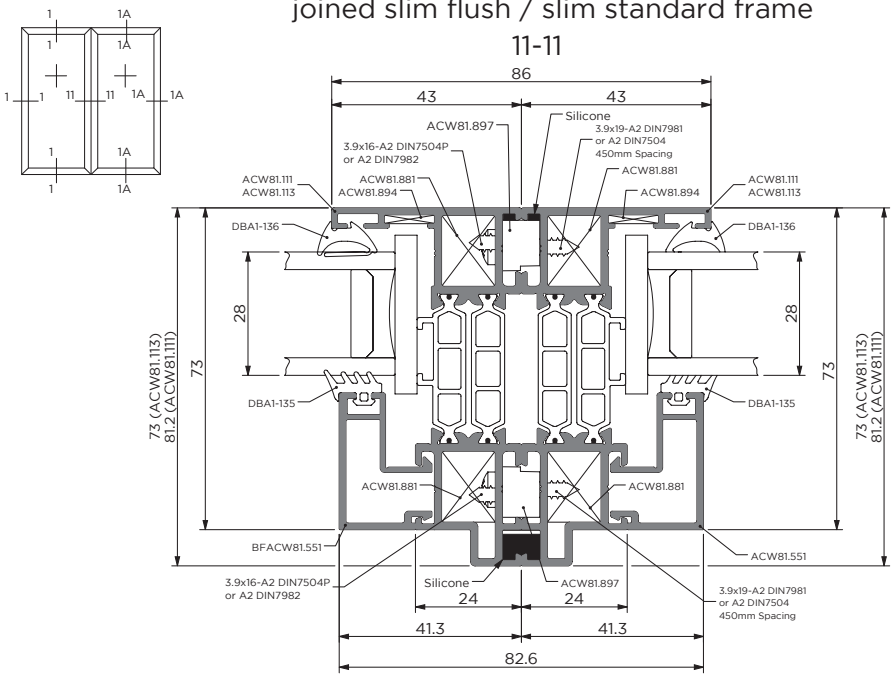

Individual open light - open light joined slim flush / slim standard frame

11A-11A

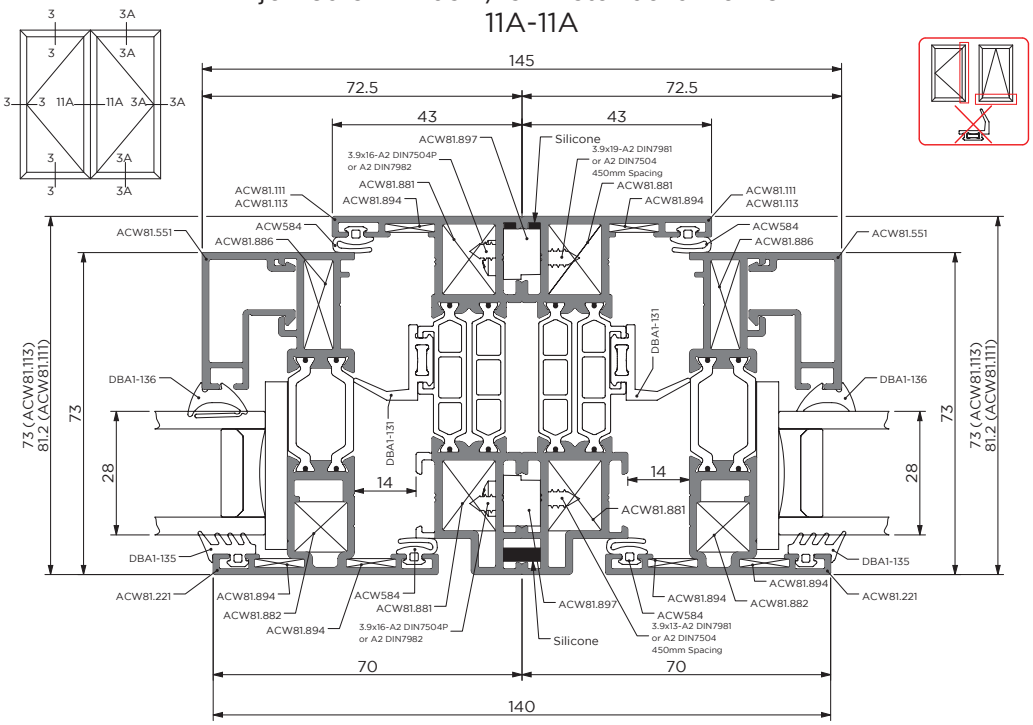

02.12

ACW81

ALUNET SYSTEMS

Corner Mullion connections - Open Out

12-12

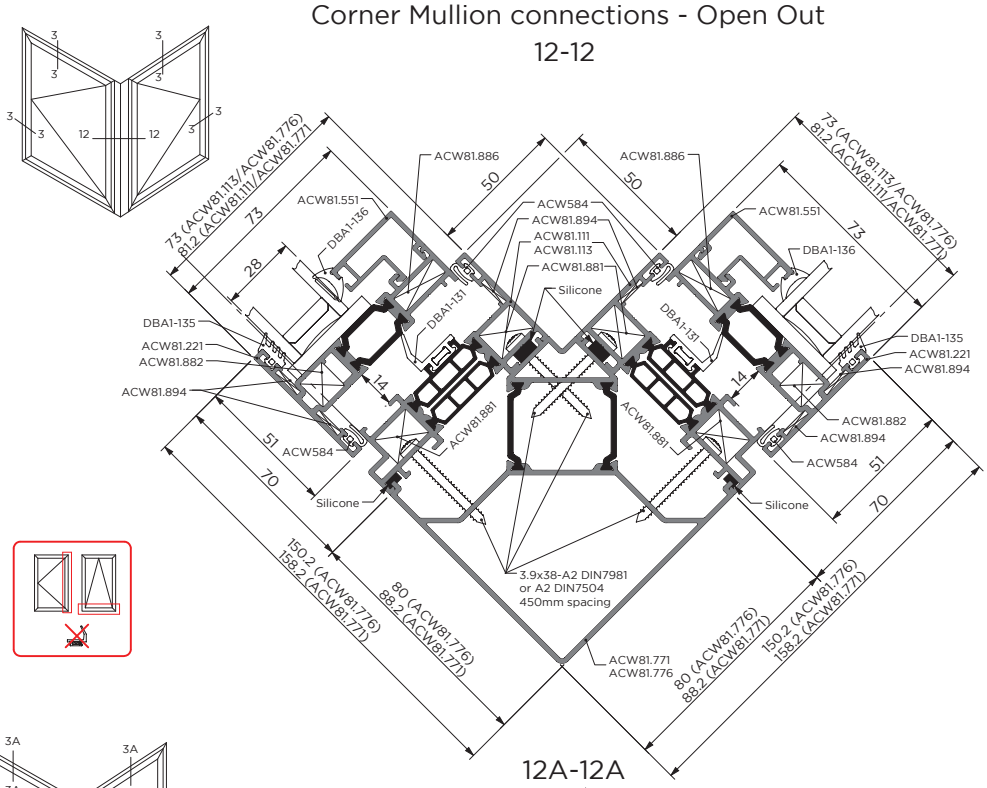

12A-12A

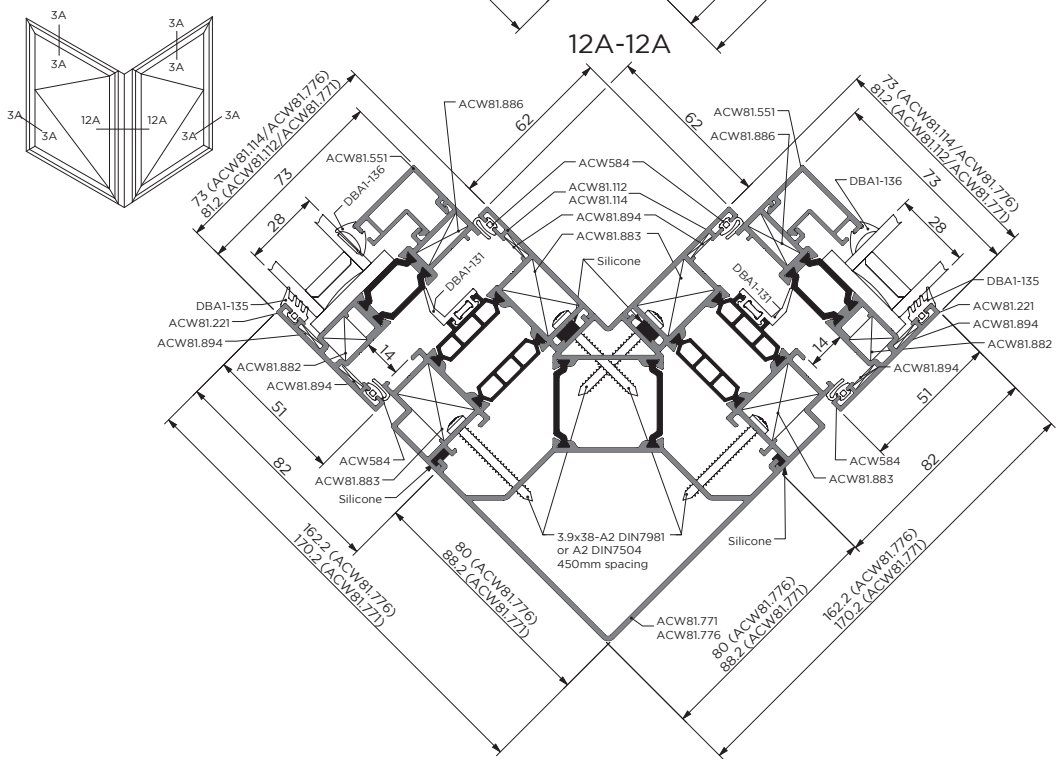

ACW81

ALUNET SYSTEMS

Corner mullion slim flush / slim standard frame with sash internally glazed fixed light

13-13

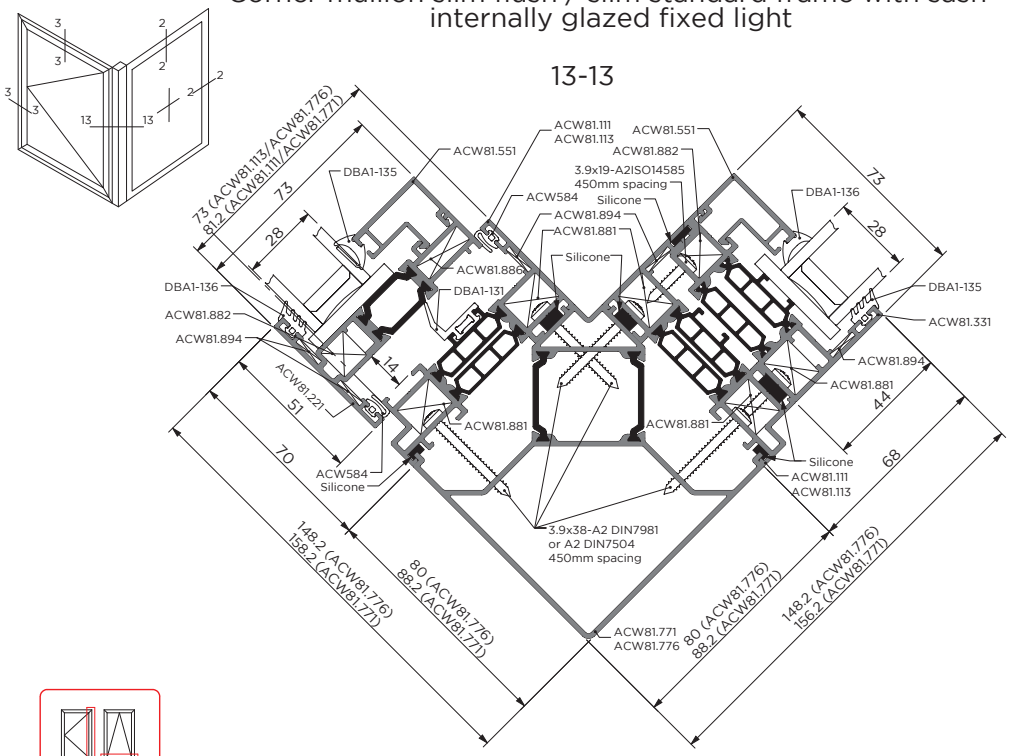

Corner mullion standard flush / standard frame with sash internally glazed fixed light

13A-13A

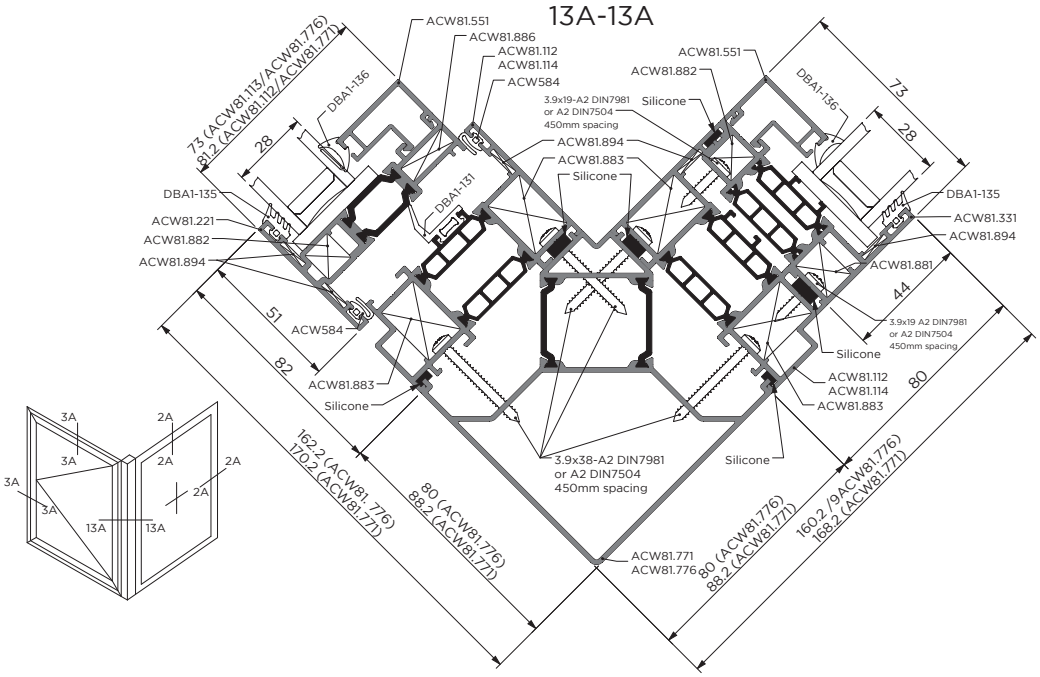

ACW81

ALUNET SYSTEMS

Corner mullion slim flush / slim standard frame with sash externally glazed fixed light

14-14

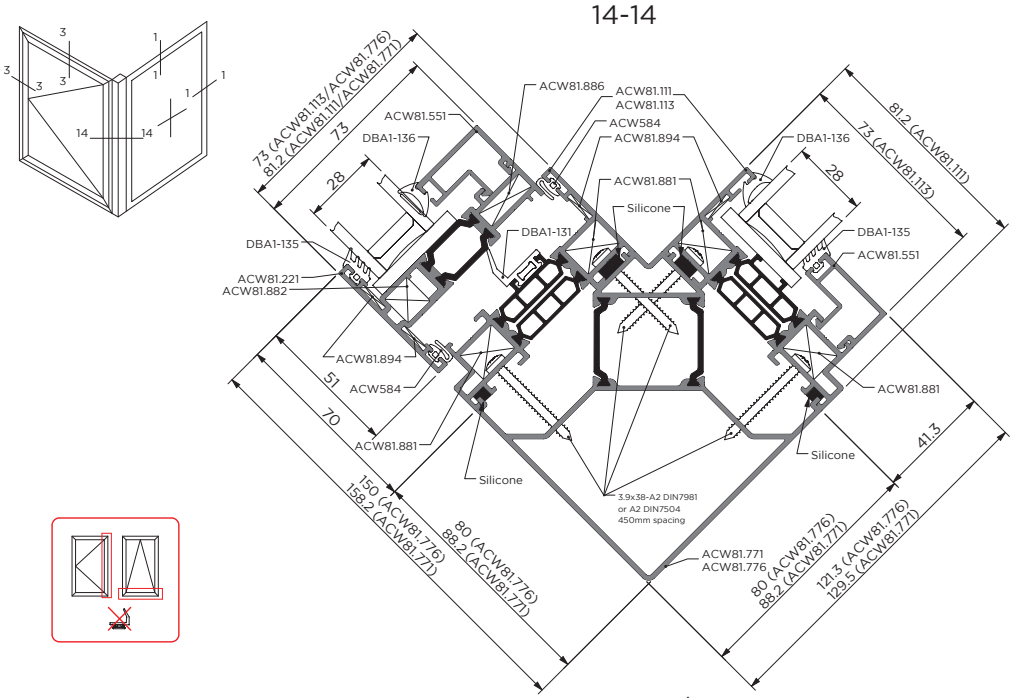

Corner mullion standard flush / standard frame with sash externally glazed fixed light

14A-14A

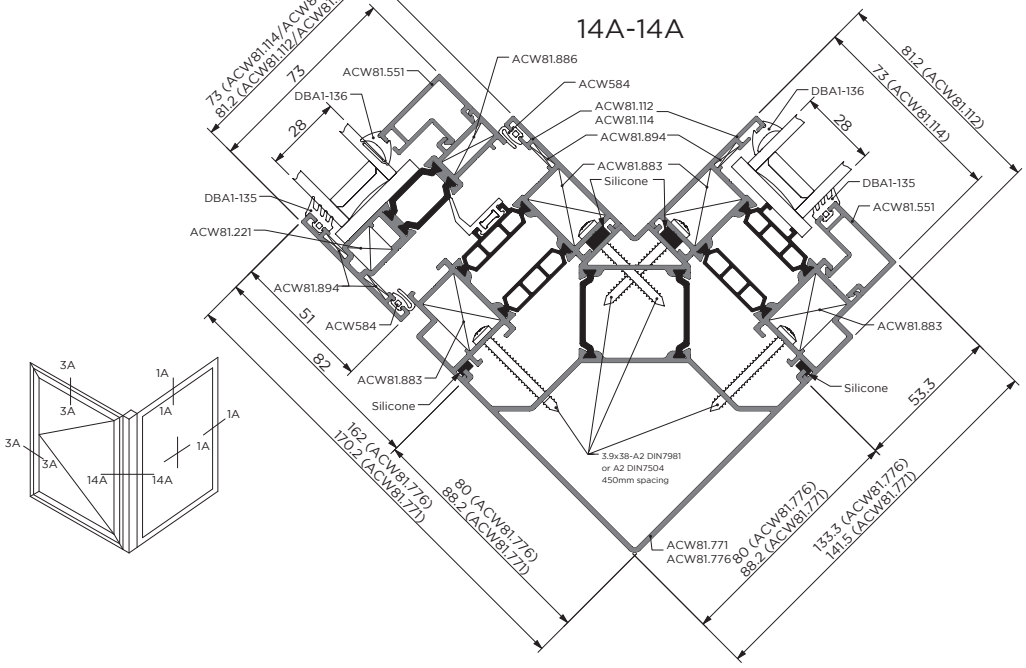

ACW81

ALUNET SYSTEMS

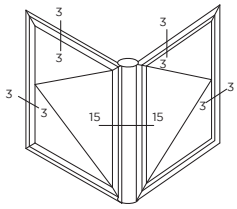

Baypole - slim standard frame & slim flush frame with sash

15-15

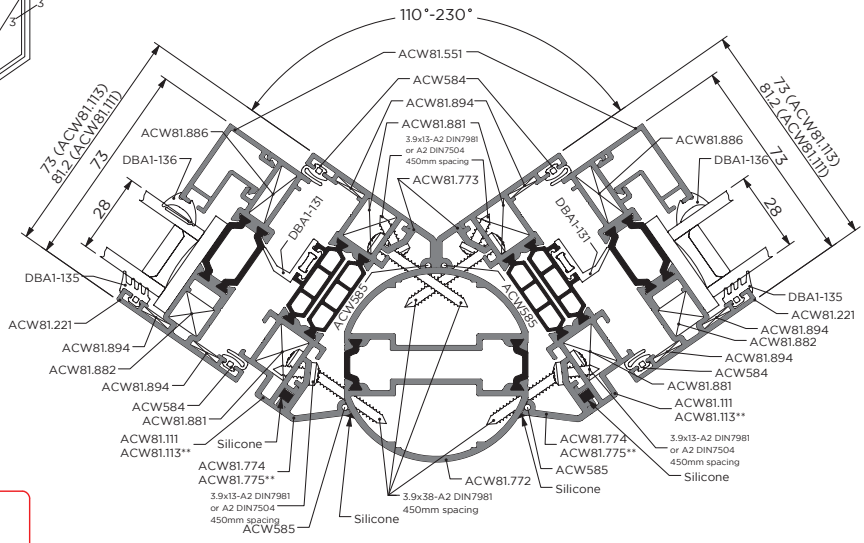

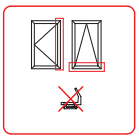

Baypole - Slim standard frame & slim flush frame with sash internally glazed fixed light

15A-15A

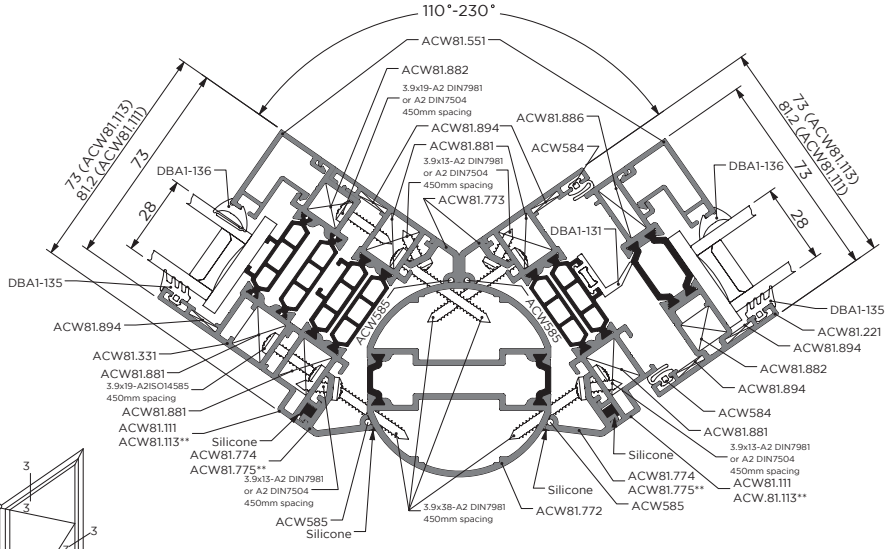

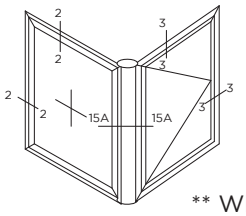

** When using standard frame ACW81.113, use rotary clip ACW81.775

ACW81

ALUNET SYSTEMS

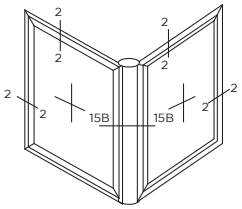

Baypole fixed light - internally glazed
Slim standard frame & slim flush frame

15B-15B

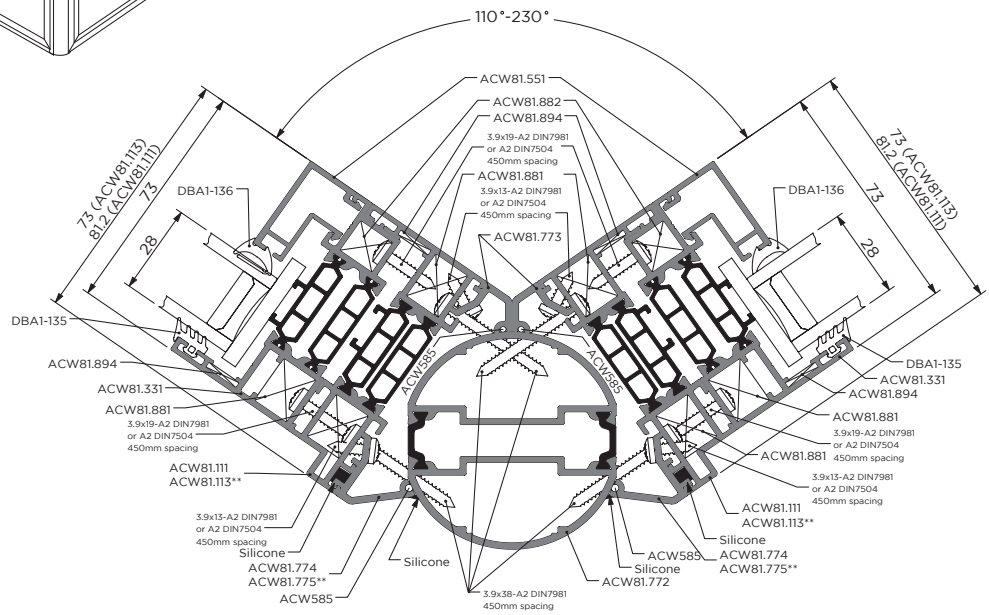

** When using standard frame ACW81.113, use rotary clip ACW81.775

ACW81

ALUNET SYSTEMS

Baypole open light & externally glazed fixed light
Standard slim frame & flush slim frame

15C-15C

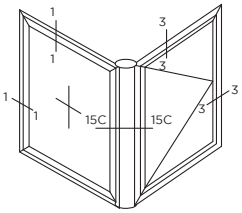

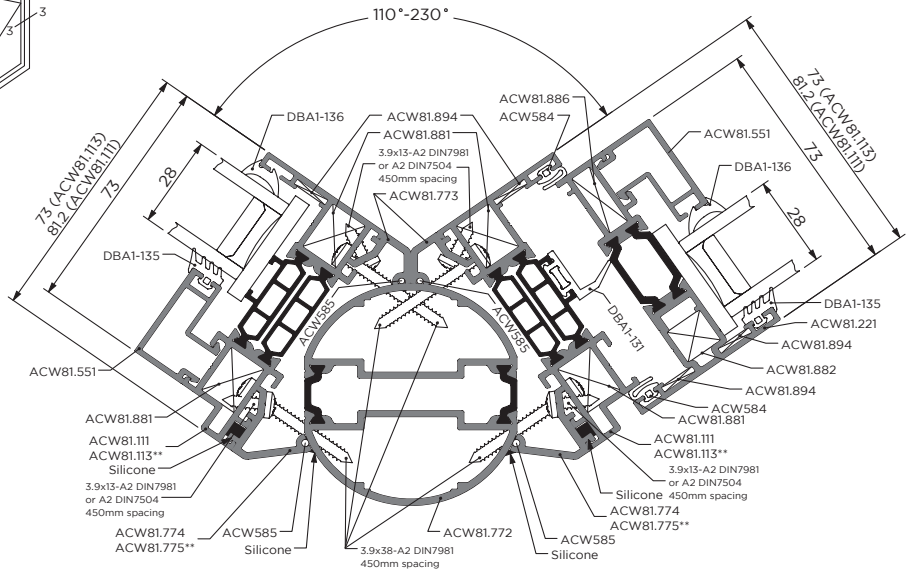

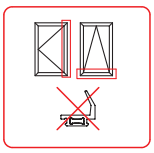

Baypole fixed light externally glazed
Standard Slim frame & flush slim frame

15D-15D

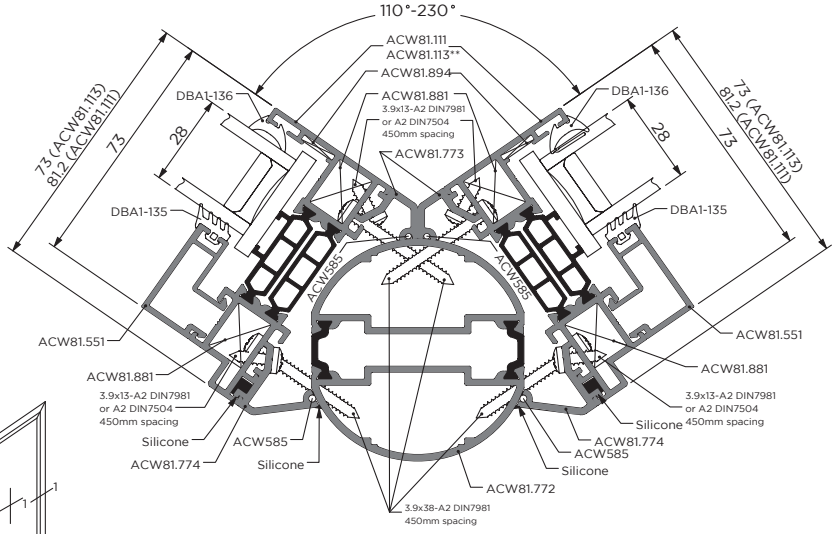

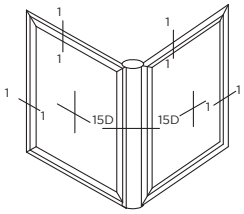

** When using standard frame ACW81.113, use rotary clip ACW81.775

02.18

ACW81

ALUNET SYSTEMS

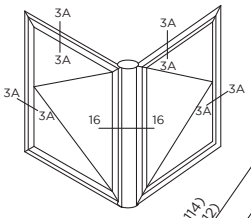

Baypole standard frame & standard flush frame -opening lights

16-16

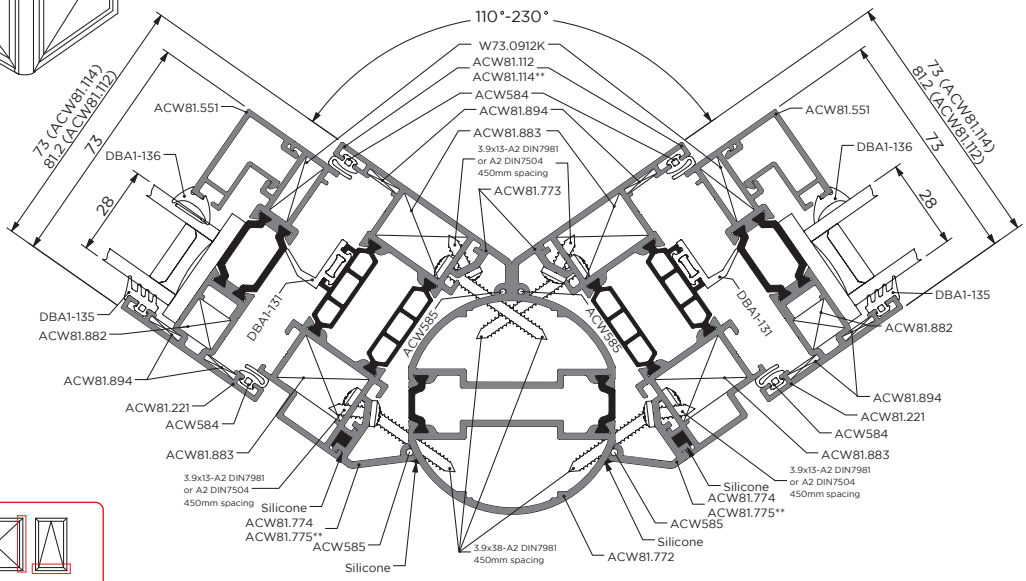

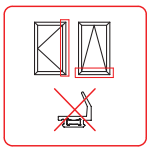

Baypole standard frame & standard flush frame -opening light-fixed light internally glazed

16A-16A

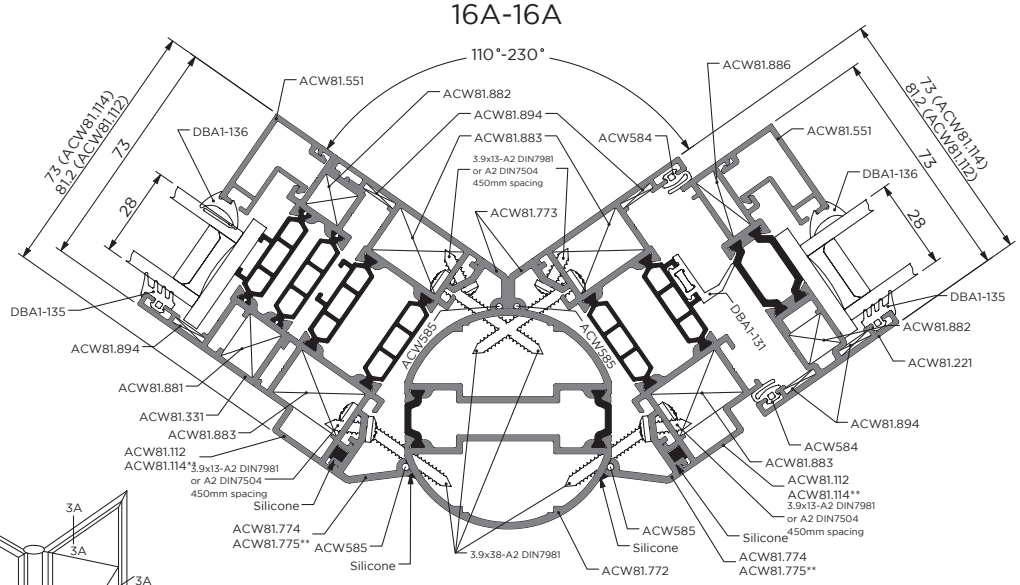

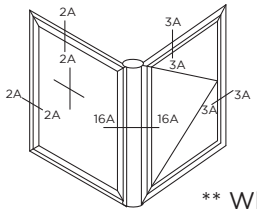

** When using standard frame ACW81.114, use rotary clip ACW81.775

ACW81

ALUNET SYSTEMS

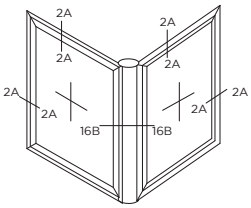

Baypole - standard frame & standard flush frame fixed light -internally glazed

16B-16B

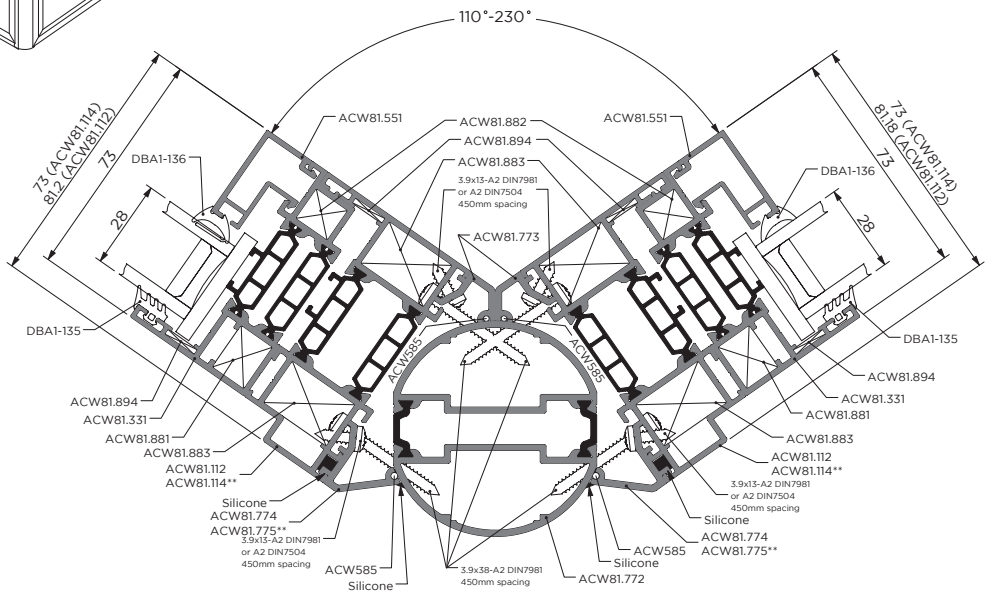

** When using standard frame ACW81.114, use rotary clip ACW81.775

ACW81

ALUNET SYSTEMS

Baypole - standard frame & standard flush frame fixed-open -externally glazed

16C-16C

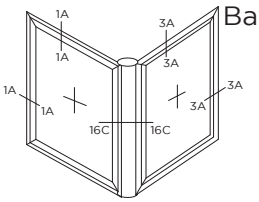

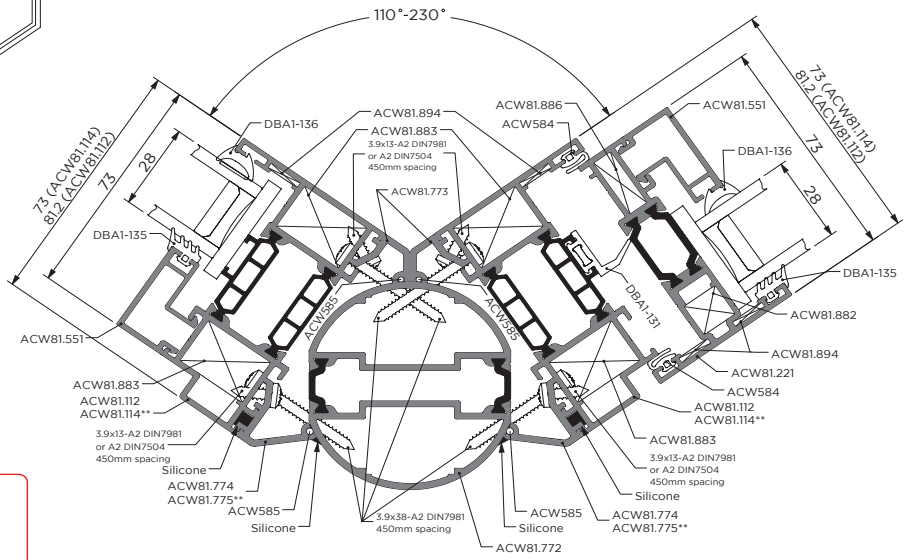

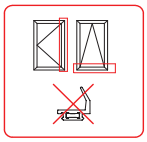

Baypole - standard frame & standard flush frame fixed-fixed -externally glazed

16D-16D

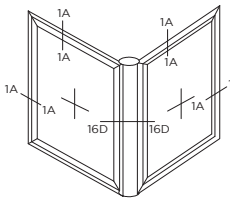

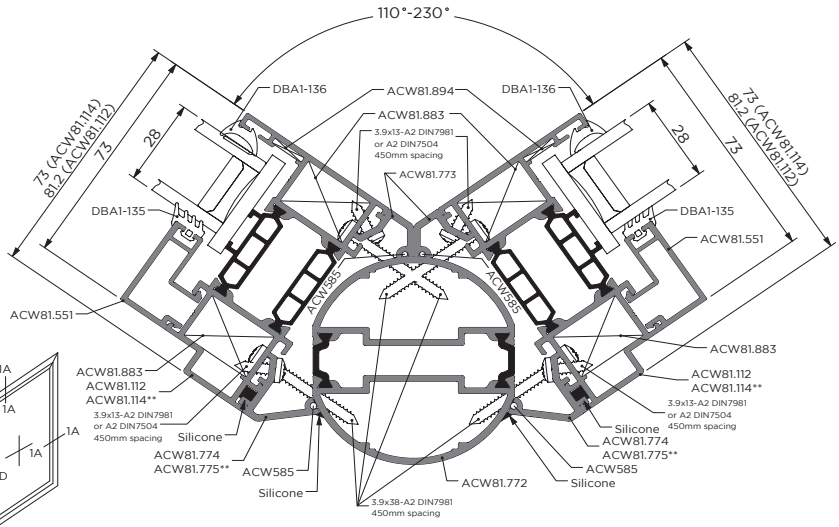

** When using standard frame ACW81.114, use rotary clip ACW81.775

ACW81

ALUNET SYSTEMS

Connector - slim flush / slim frame fixed light -externally glazed

17-17

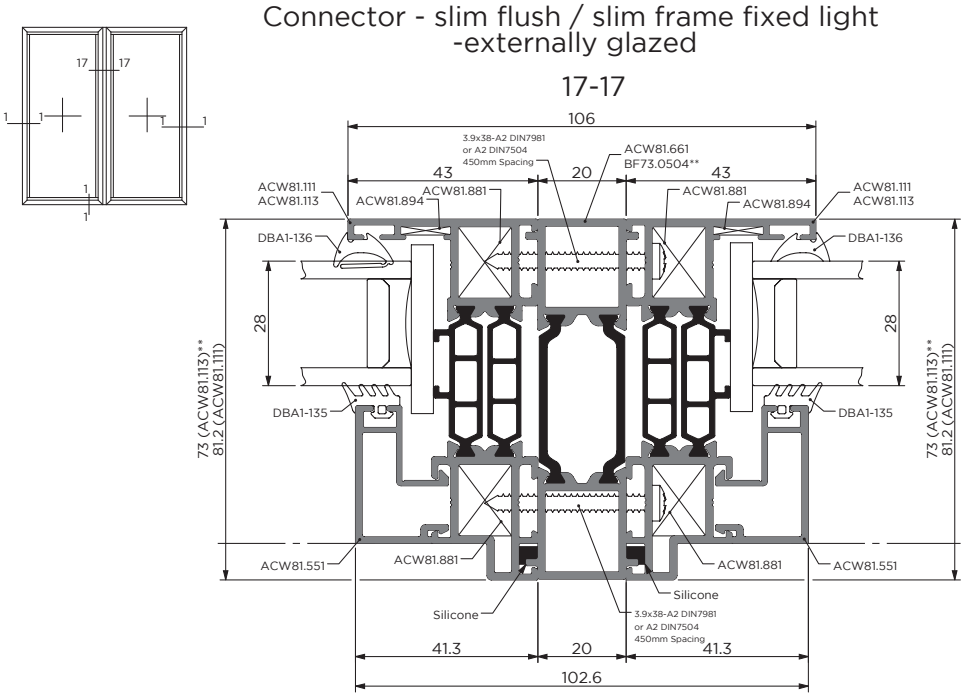

Connector - standard flush / standard frame fixed light -externally glazed

17A-17A

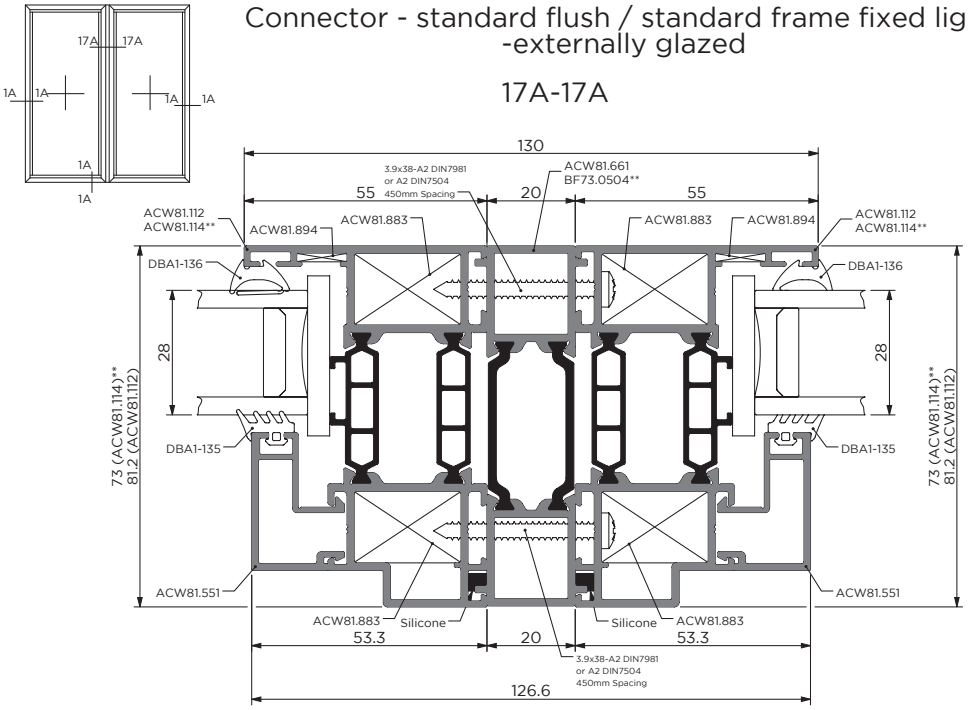

** When using standard frame ACW81.113 or ACW81.114, use connector BF73.0504

ACW81

ALUNET SYSTEMS

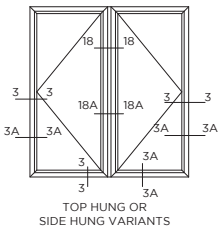

Connector - slim flush/ slim standard frame open light
18-18

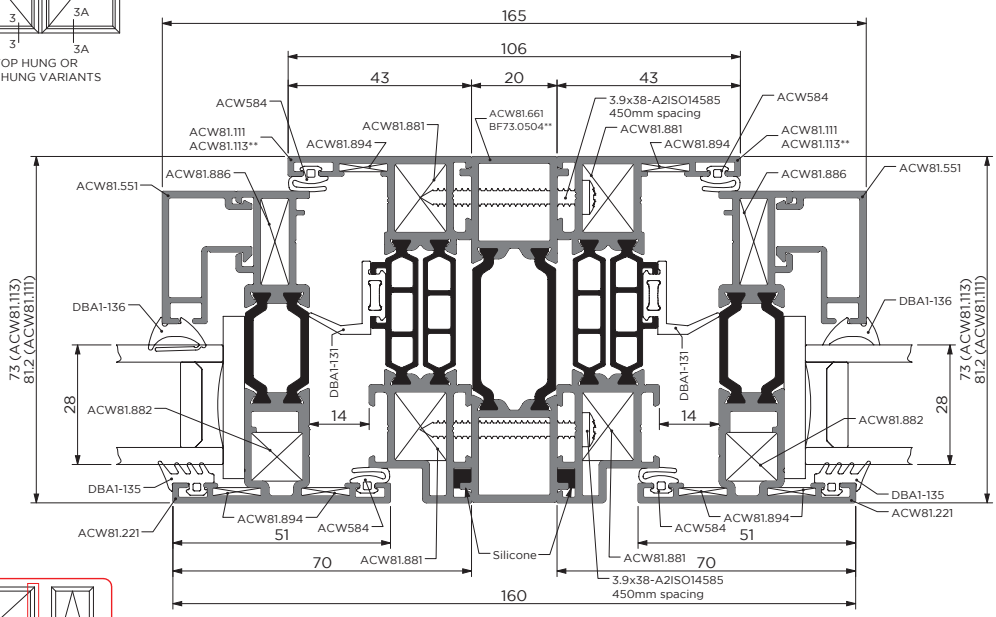

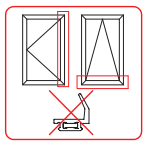

Connector - standard flush/standard frame open light
18A-18A

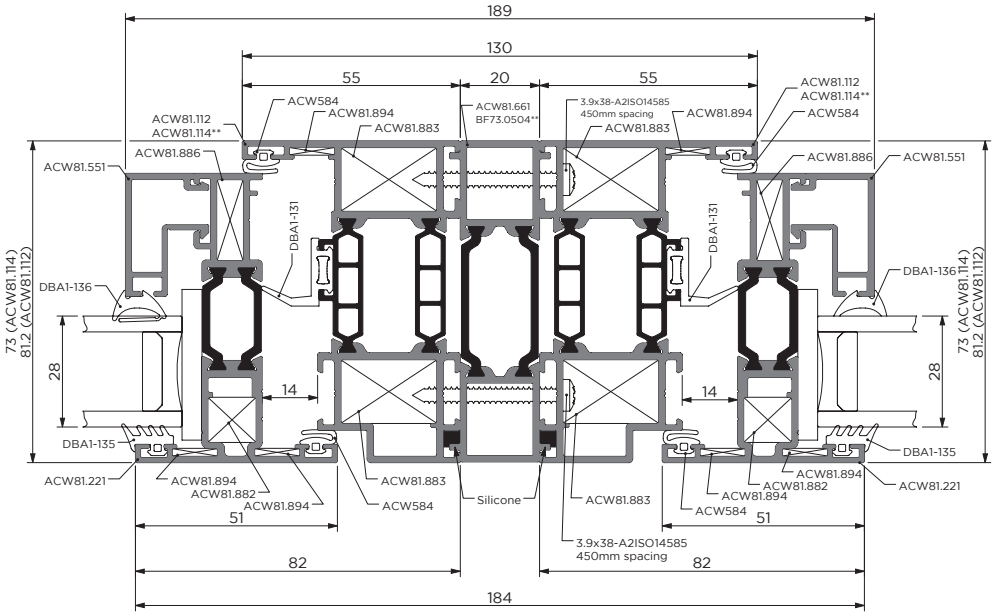

** When using standard frame ACW81.113 & ACW81.114, use connector BF73.0504

ACW81

ALUNET SYSTEMS

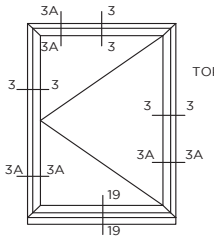

SIDE HUNG OR
TOP HUNG VARIANTS

Sub cill -Open light - all frame variants

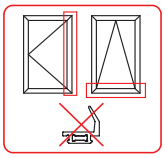

19-19

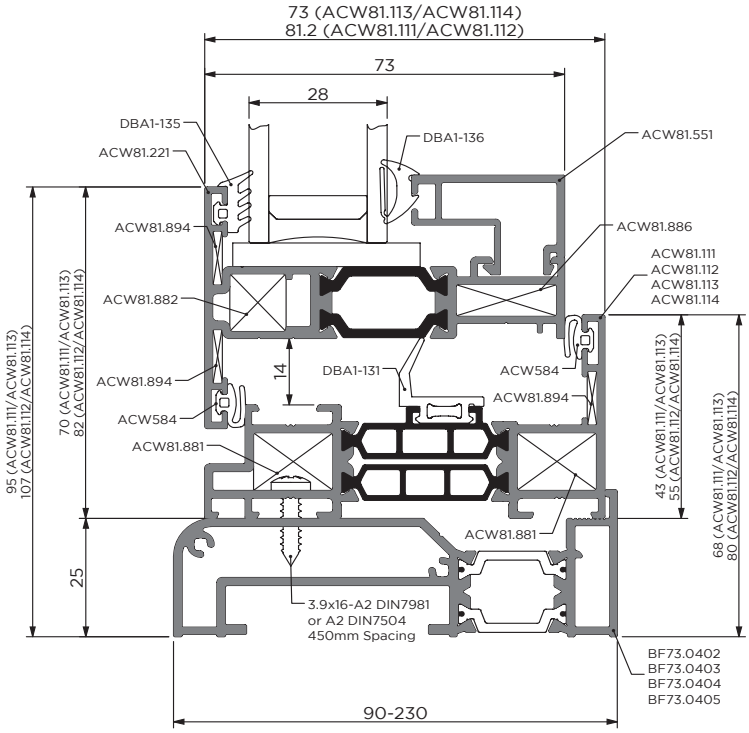

ACW81

ALUNET SYSTEMS

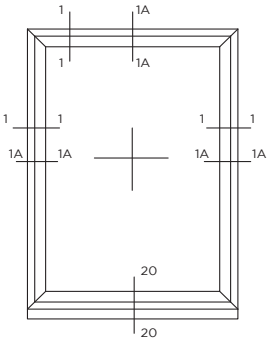

Sub cill-All frame variants - fixed light -externally glazed

20-20

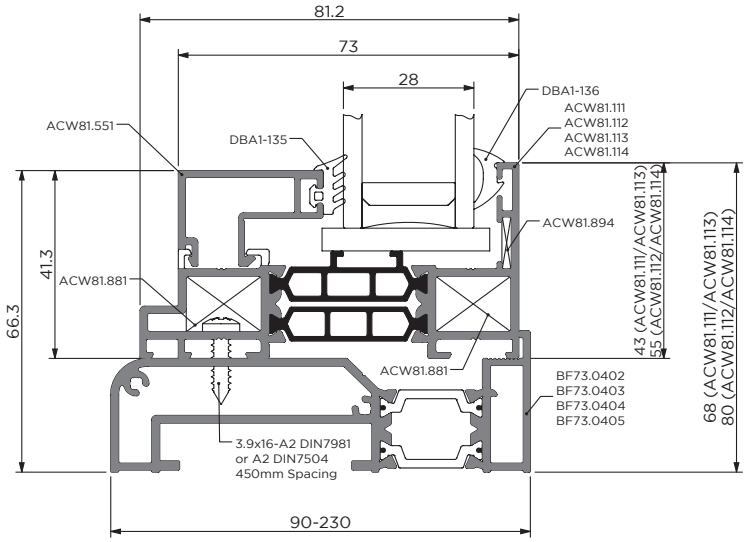

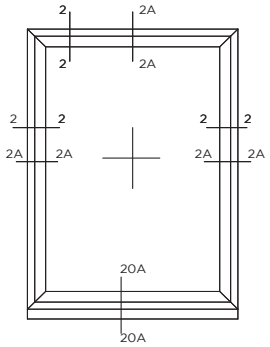

Sub cill-All frame variants - fixed light -internally glazed

20A-20A

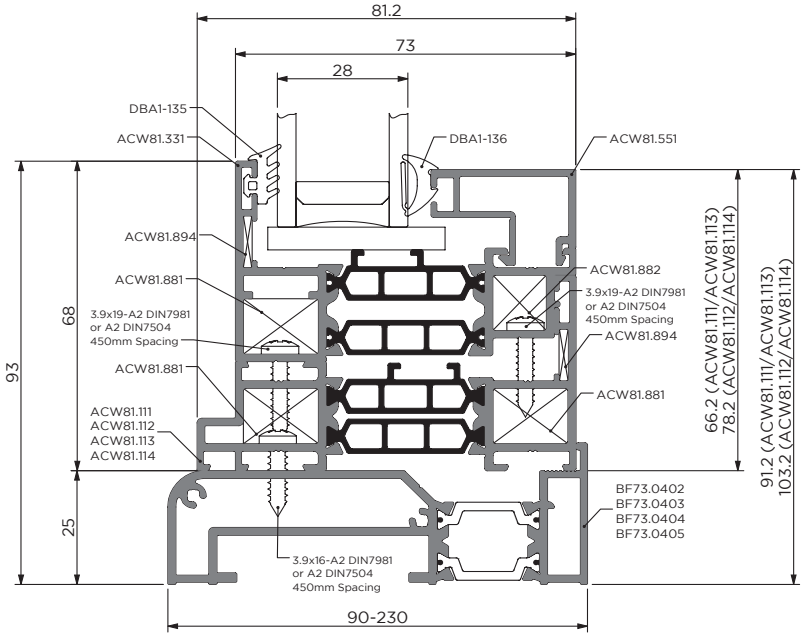

03 Typical Window Estimation Examples

ACW81

ALUNET SYSTEMS

Example of internally glazed fixed light estimation
Standard Slim frame ACW81.113

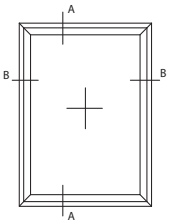

A-A

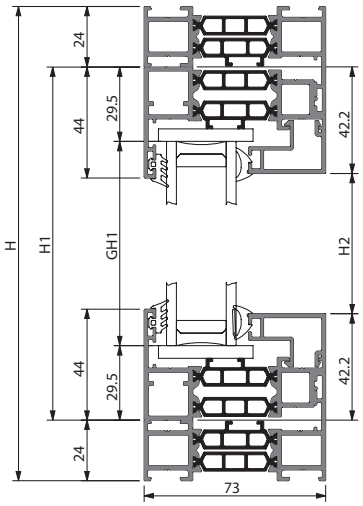

B-B

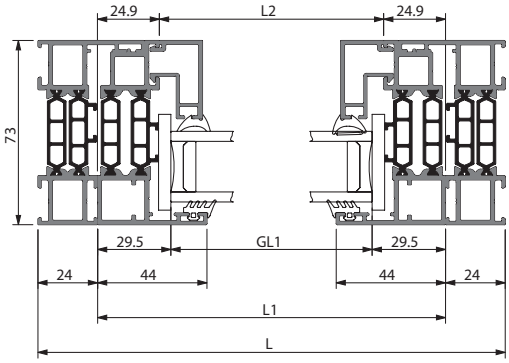

CUTTING DETAILS					
ARTICLE	DESCRIPTION	DRAWING	END CUT	REFERENCE	QTY
ACW81.113	SLIM FRAME PROFILE			L	2
				H	2
ACW81.331	ADAPTOR PROFILE			L1=L-48	2
				H1=H-48	2
ACW81.551	BEAD PROFILE			L2=L1-49.8	2
				H2=H1-84.4	2
		GLASS	FIXED	GL1=L1-59 GH1=H1-59	1

ARTICLE	DESCRIPTION	DRAWING	QTY
ACW81.894	CHEVRON		8
ACW81.881	CORNER CLEAT		12
ACW81.882	CORNER CLEAT		4
ACW81.893WH / ACW81.893BL	DRAINAGE CAP		2

GASKETS			
ARTICLE	DESCRIPTION	DRAWING	QTY
DBA1-135	RUBBER GASKET		(H2+L2)x2
DBA1-136	RUBBER GASKET		(H2+L2)x2

ACW81

ALUNET SYSTEMS

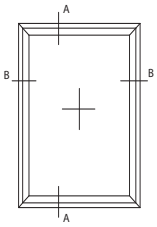

Example of internally glazed fixed light estimation
Slim flush frame ACW81.111

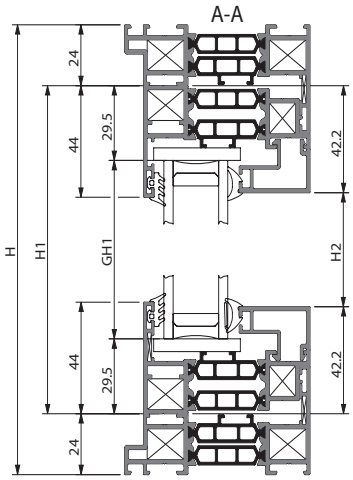

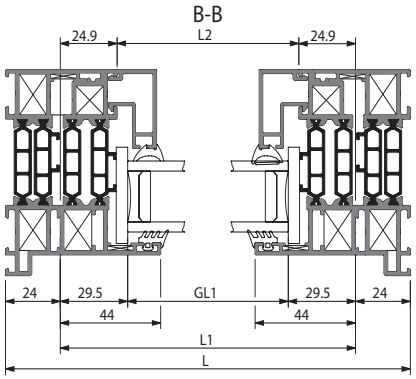

CUTTING DETAILS					
ARTICLE	DESCRIPTION	DRAWING	END CUT	REFERENCE	QTY
ACW81.111	SLIM FRAME PROFILE - FLUSH			L	2
				H	2
ACW81.331	ADAPTOR PROFILE			L1=L-48	2
				H1=H-48	2
ACW81.551	BEAD PROFILE			L2=L1-49.8	2
				H2=H1-84.4	2
		GLASS	FIXED	GL1=L1-59 GH1=H1-59	1

ARTICLE	DESCRIPTION	DRAWING	QTY
ACW81.894	CHEVRON		8
ACW81.881	CORNER CLEAT		12
ACW81.882	CORNER CLEAT		4
ACW81.893WH / ACW81.893BL	DRAINAGE CAP		2

GASKETS			
ARTICLE	DESCRIPTION	DRAWING	QTY
DBA1-135	RUBBER GASKET		(H2+L2)x2
DBA1-136	RUBBER GASKET		(H2+L2)x2

ACW81

ALUNET SYSTEMS

Example of internally glazed fixed light estimation
Standard flush frame ACW81.112

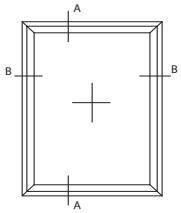

A-A

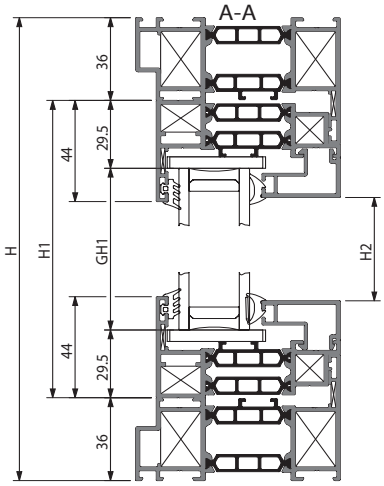

B-B

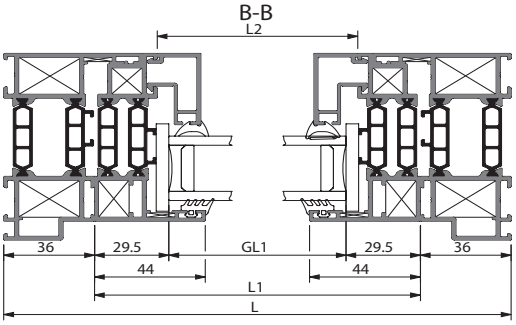

CUTTING DETAILS					
ARTICLE	DESCRIPTION	DRAWING	END CUT	REFERENCE	QTY
ACW81.112	FLUSH STANDARD FRAME			L	2
				H	2
ACW81.331	ADAPTOR PROFILE			L1=L-72	2
				H1=H-72	2
ACW81.551	BEAD PROFILE			L2=L1-49.8	2
				H2=H1-84.4	2
		GLASS	FIXED	GL1=L1-59 GH1=H1-59	1

ACCESSORIES & HARDWARE			
ARTICLE	DESCRIPTION	DRAWING	QTY
ACW81.894	CHEVRON		8
ACW81.881	CORNER CLEAT		4
ACW81.882	CORNER CLEAT		4
ACW81.893WH/ ACW81.893BL	DRAINAGE CAP		2
ACW81.883	CORNER CLEAT		8

GASKETS			
ARTICLE	DESCRIPTION	DRAWING	QTY
DBA1-135	RUBBER GASKET		(H2+L2)x2
DBA1-136	RUBBER GASKET		(H2+L2)x2

ACW81

ALUNET SYSTEMS

Example of internally glazed fixed light estimation
Standard frame ACW81.114

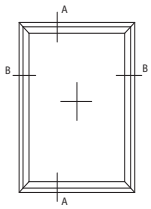

A-A

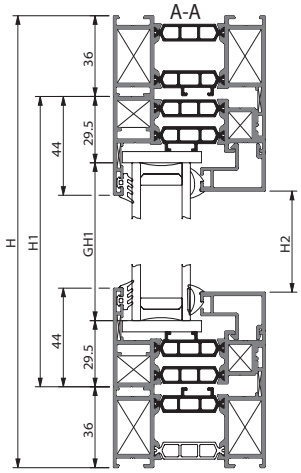

B-B

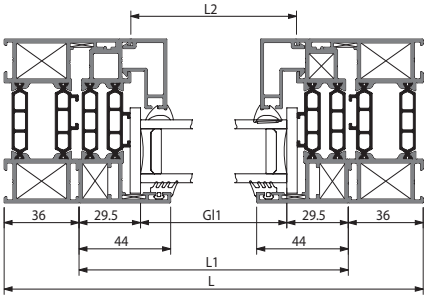

CUTTING DETAILS					
ARTICLE	DESCRIPTION	DRAWING	END CUT	REFERENCE	QTY
ACW81.114	STANDARD FRAME PROFILE			L	2
				H	2
ACW81.331	ADAPTOR PROFILE			L1=L-72	2
				H1=H-72	2
ACW81.551	BEAD PROFILE			L2=L1-49.8	2
				H2=H1-84.4	2
		GLASS	FIXED	GL1=L1-59 GH1=H1-59	1

ACCESSORIES & HARDWARE			
ARTICLE	DESCRIPTION	DRAWING	QTY
ACW81.894	CHEVRON		8
ACW81.881	CORNER CLEAT		4
ACW81.882	CORNER CLEAT		4
ACW81.893WH/ ACW81.893BL	DRAINAGE CAP		2
ACW81.883	CORNER CLEAT		8

GASKETS			
ARTICLE	DESCRIPTION	DRAWING	QTY
DBA1-135	RUBBER GASKET		(H2+L2)x2
DBA1-136	RUBBER GASKET		(H2+L2)x2

ACW81

ALUNET SYSTEMS

Example of externally glazed fixed light estimation
Slim flush frame ACW81.111 & Slim standard frame ACW81.113

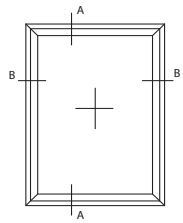

A-A

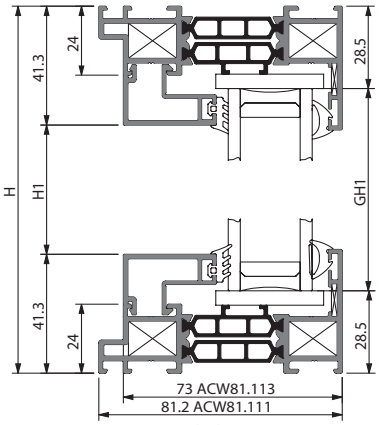

B-B

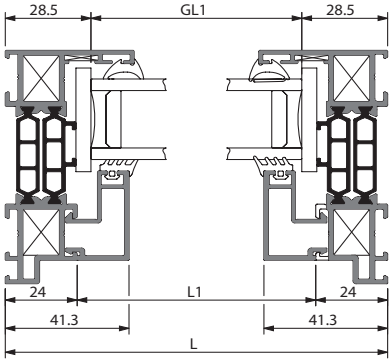

CUTTING DETAILS					
ARTICLE	DESCRIPTION	DRAWING	END CUT	REFERENCE	QTY
ACW81.111/ ACW81.113	SLIM FRAME PROFILE - FLUSH or STANDARD			L	2
				H	2
ACW81.551	BEAD PROFILE			L1=L-48	2
				H1=H-82.6	2
		GLASS	FIXED	GL1=L-57 GH1=H-57	1

ACCESSORIES & HARDWARE			
ARTICLE	DESCRIPTION	DRAWING	QTY
ACW81.894	CHEVRON		4
ACW81.881	CORNER CLEAT		8

GASKETS			
ARTICLE	DESCRIPTION	DRAWING	QTY
DBA1-135	RUBBER GASKET		(H1+L1)x2
DBA1-136	RUBBER GASKET		(H1+L1)x2

ACW81

ALUNET SYSTEMS

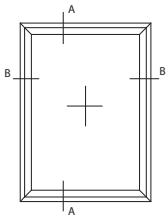

Example of externally glazed fixed light estimation
Standard flush frame ACW81.112 & Standard frame ACW81.114

A-A

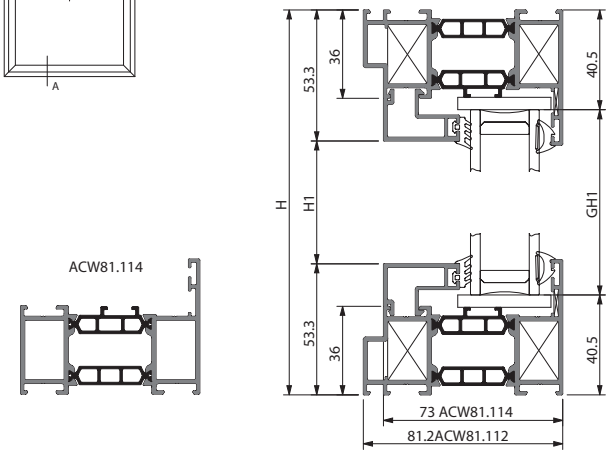

ACW81.114

B-B

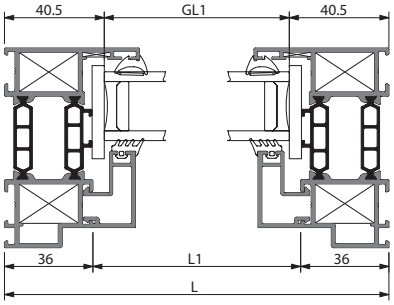

CUTTING DETAILS					
ARTICLE	DESCRIPTION	DRAWING	END CUT	REFERENCE	QTY
ACW81.112 / ACW81.114	STANDARD FRAME FLUSH FRAME			L	2
				H	2
ACW81.551	BEAD PROFILE			L1=L-72	2
				H1=H-106.6	2
		GLASS	FIXED	GL1=L-81 GH1=H-81	1

ACCESSORIES & HARDWARE			
ARTICLE	DESCRIPTION	DRAWING	QTY
ACW81.894	CHEVRON		8
ACW81.883	CORNER CLEAT		8
ACW81.893WH/ ACW81.893BL	DRAINAGE CAP		2

GASKETS			
ARTICLE	DESCRIPTION	DRAWING	QTY
DBA1-135	RUBBER GASKET		(H1+L1)x2
DBA1-136	RUBBER GASKET		(H1+L1)x2

ACW81

ALUNET SYSTEMS

Example of top hung estimation
Slim flush frame ACW81.111 & Slim frame ACW81.113

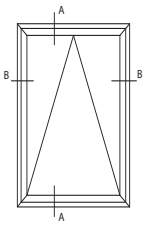

A-A

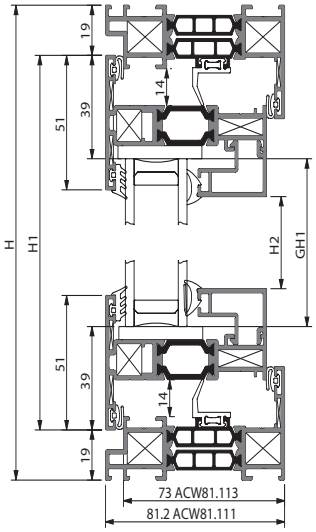

ACW81.113

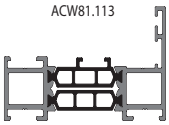

B-B

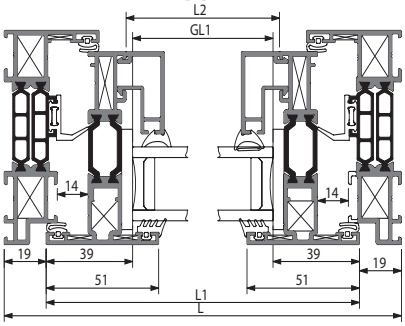

CUTTING DETAILS					
ARTICLE	DESCRIPTION	DRAWING	END CUT	REFERENCE	QTY
ACW81.111 / ACW81.113	SLIM FLUSH FRAME + SLIM STANDARD FRAME			L	2
				H	2
ACW81.221	SUPER SLIM SASH PROFILE			L1=L-38	2
				H1=H-38	2
ACW81.551	BEAD PROFILE			L2=L1-72.4	2
				H2=H1-107	2
		GLASS	SASH	GL1=L1-78 GH1=H1-78	1

ACCESSORIES & HARDWARE			
ARTICLE	DESCRIPTION	DRAWING	QTY
ACW81.894	CHEVRON		12
ACW81.881	CORNER CLEAT		8
ACW81.882	CORNER CLEAT		4
ACW81.886	CORNER CLEAT		4

GASKETS			
ARTICLE	DESCRIPTION	DRAWING	QTY(m)
DBA1-131R	RUBBER GASKET**		H1x2+L1
ACW584	RUBBER GASKET		(L1+H1)x4
DBA1-135	RUBBER GASKET		(L2+H2)x2
DBA1-136	RUBBER GASKET		(L2+H2)x2

RUBBER GASKET** - OPTIONAL

ACW81

ALUNET SYSTEMS

Example of top hung estimation
Standard flush frame ACW81.112 & Standard frame ACW81.114

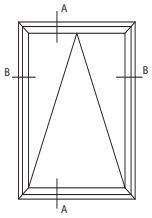

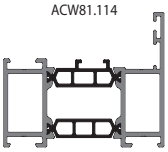

A-A

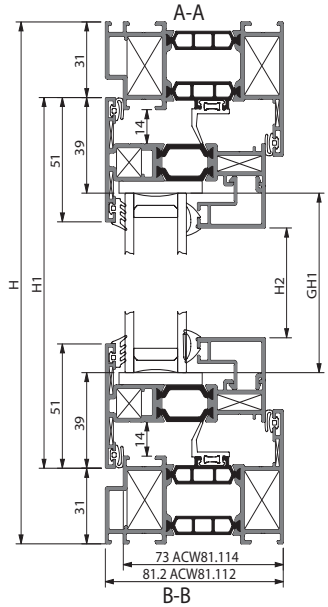

B-B

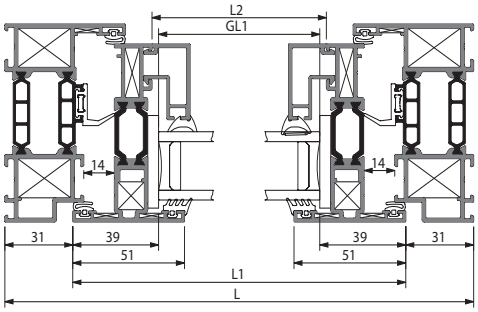

CUTTING DETAILS					
ARTICLE	DESCRIPTION	DRAWING	END CUT	REFERENCE	QTY
ACW81.112 / ACW81.114	STANDARD FRAME - STANDARD FLUSH FRAME			L	2
				H	2
ACW81.223	SUPER SLIM SASH PROFILE			L1=L-62	2
				H1=H-62	2
ACW81.551	BEAD PROFILE			L2=L1-72.4	2
				H2=H1-107	2
		GLASS	SASH	GL1=L1-78	1
				GH1=H1-78	

ACCESSORIES & HARDWARE			
ARTICLE	DESCRIPTION	DRAWING	QTY
ACW81.894	CHEVRON		12
ACW81.883	CORNER CLEAT		8
ACW81.882	CORNER CLEAT		4
ACW81.886	CORNER CLEAT		4

GASKETS			
ARTICLE	DESCRIPTION	DRAWING	QTY(m)
DBA1-131R	RUBBER GASKET **		H1x2+L1
ACW584	RUBBER GASKET		(L1+H1)x4
DBA1-135	RUBBER GASKET		(L2+H2)x2
DBA1-136	RUBBER GASKET		(L2+H2)x2

RUBBER GASKET** - OPTIONAL

ACW81

ALUNET SYSTEMS

Example of combined estimation
Side opening with internally glazed fixed light
Slim flush frame ACW81.111 / slim standard frame ACW81.113

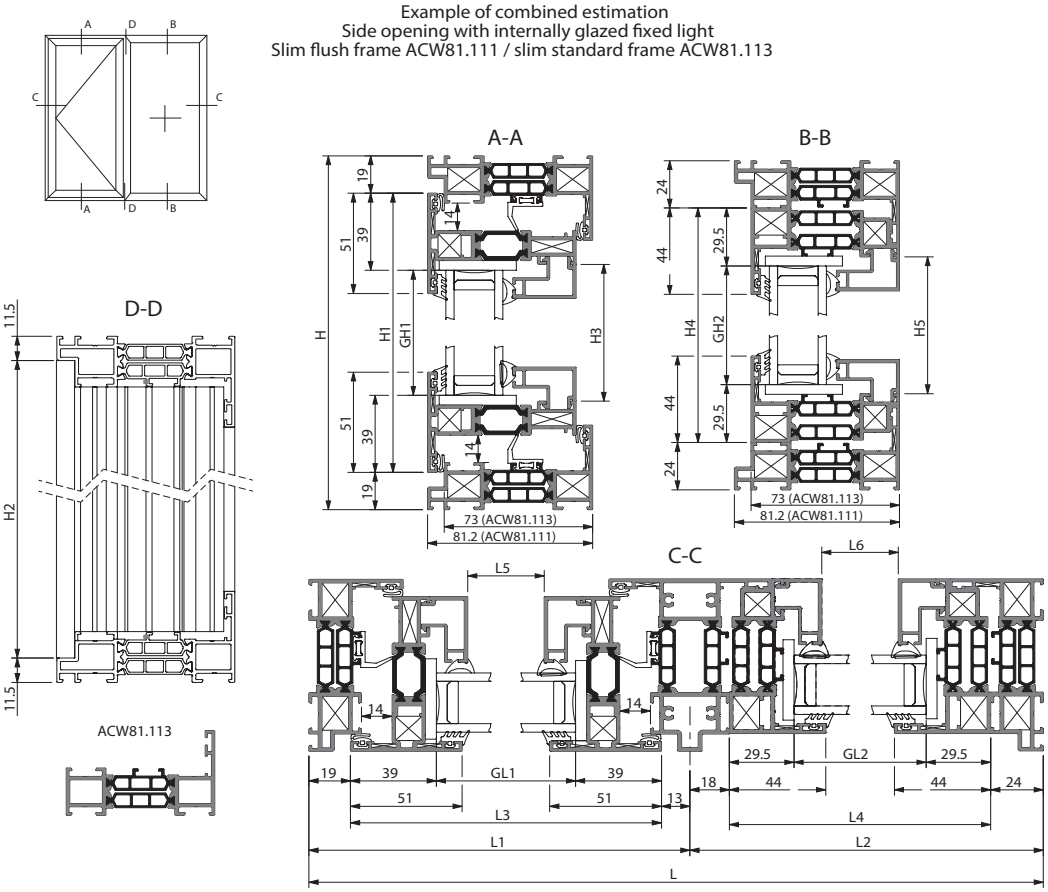

CUTTING DETAILS					
ARTICLE	DESCRIPTION	DRAWING	END CUT	REFERENCE	QTY
ACW81.111	FLUSH SLIM / STANDARD SLIM FRAME			L	2
				H	2
ACW81.221	SUPER SLIM SASH PROFILE			L3=L1-32	2
				H1=H-38	2
ACW81.441	REBATE TRANSOM PROFILE			H2=H-24	1
ACW81.331	ADAPTOR PROFILE			L4=L2-42	2
				H4=H-48	2
ACW81.551	BEAD PROFILE			L5=L3-107	2
				H3=H1-72.4	2
				L6=L2-84.4	2
				H5=H4-49.8	2
		GLASS	SASH	GL1=L3-78	1
				GH1=H1-78	
			FIXED	GL2=L4-59	1
				GH2=H4-59	

GASKETS			
ARTICLE	DESCRIPTION	DRAWING	QTY
DBA1-131R	RUBBER GASKET**		(L3x2)+H1
ACW584	RUBBER GASKET		(H1+L3)x4
DBA1-135	RUBBER GASKET		(H1+L3+H4+L4)x2
DBA1-136	RUBBER GASKET		(H1+L3+H4+L4)x2

ACCESSORIES & HARDWARE			
ARTICLE	DESCRIPTION	DRAWING	QTY
ACW81.894	CHEVRON		16
ACW81.881	CORNER CLEAT		12
ACW81.882	CORNER CLEAT		8
ACW81.886	CORNER CLEAT		4
ACW81.893.WH/ ACW81.893.BL	DRAINAGE CAP		2

RUBBER GASKET** - OPTIONAL

ACW81

ALUNET SYSTEMS

Example of combined estimation
Side opening with internally glazed fixed light
flush standard frame ACW81.112 / standard frame ACW81.114

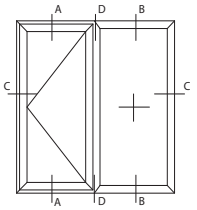

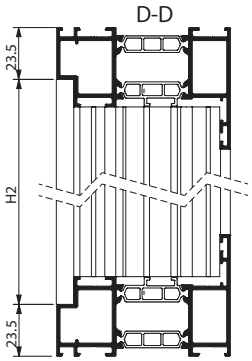

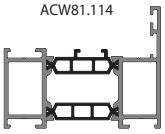

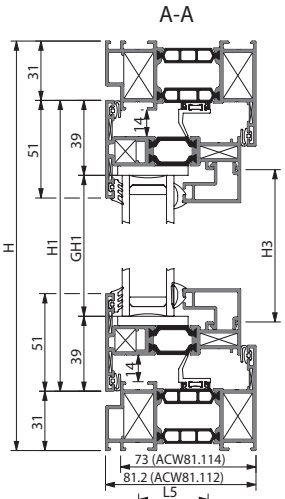

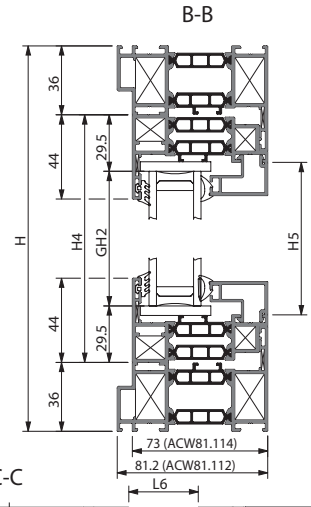

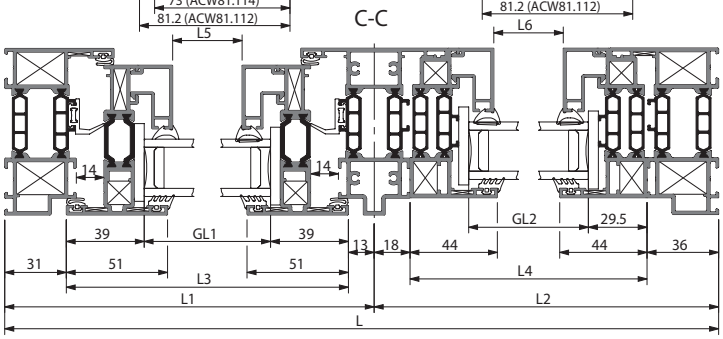

ARTICLE	DESCRIPTION	DRAWING	END CUT	REFERENCE	QTY
ACW81.112	FLUSH STANDARD / STANDARD FRAME			L	2
				H	2
ACW81.221	SUPER SLIM SASH PROFILE			L3=L1-44	2
				H1=H-62	2
ACW81.441	REBATE TRANSOM PROFILE			H2=H-48	1
ACW81.331	ADAPTOR PROFILE			L4=L2-54	2
				H4=H-72	2
ACW81.551	BEAD PROFILE			L5=L3-107	2
				H3=H1-72.4	2
				L6=L2-84.4	2
				H5=H4-49.8	2
		GLASS	SASH	GL1=L3-78	1
				GH1=H1-78	
			FIXED FRAME	GL2=L4-59	1
				GH2=H4-59	

GASKETS

ARTICLE	DESCRIPTION	DRAWING	QTY
DBA1-131R	RUBBER GASKET**		(L3x2)+H1
ACW584	RUBBER GASKET		(H1+L3)x4
DBA1-135	RUBBER GASKET		(H1+L3+H4+L4)x2
DBA1-136	RUBBER GASKET		(H1+L3+H4+L4)x2

ACCESSORIES & HARDWARE

ARTICLE	DESCRIPTION	DRAWING	QTY
ACW81.894	CHEVRON		16
ACW81.881	CORNER CLEAT		4
ACW81.882	CORNER CLEAT		8
ACW81.886	CORNER CLEAT		4
ACW81.883	CORNER CLEAT		8
ACW81.893.WH/ ACW81.893.BL	DRAINAGE CAP		2

RUBBER GASKET** - OPTIONAL

ACW81

ALUNET SYSTEMS

Example of combined estimation
Double opening with fixed mullion
flush slim frame ACW81.111 / standard slim frame ACW81.113

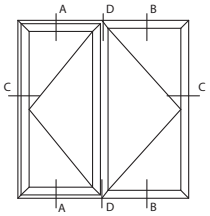

ACW81.113

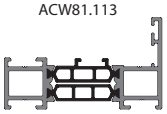

A-A/B-B

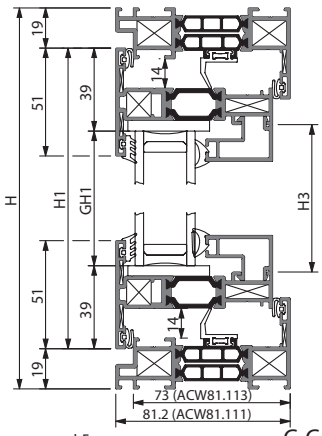

D-D

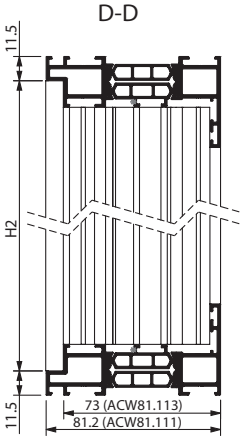

C-C

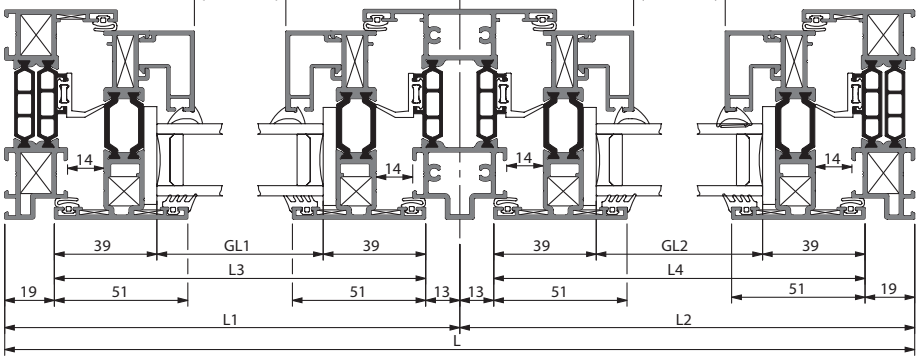

CUTTING DETAILS					
ARTICLE	DESCRIPTION	DRAWING	END CUT	REFERENCE	QTY
ACW81.111	SUM FLUSH / SLIM STANDARD FRAME			L	2
				H	2
ACW81.221	SUPER SLIM SASH PROFILE			L3=L1-32	2
				L4=L2-32	2
				H1=H-38	4
ACW81.441	REBATE TRANSOM PROFILE			H2=H-24	1
ACW81.551	BEAD PROFILE			L5=L3-107	2
				H3=H1-72,4	4
				L6=L4-107	2
		GLASS	SASH 1	GL1=L3-78	1
				GH1=H1-78	
			SASH 2	GL2=L4-78	1
				GH1=H1-78	

GASKETS			
ARTICLE	DESCRIPTION	DRAWING	QTY
DBA1-131R	RUBBER GASKET**		(2x(L3+L4))+(H1x2)
ACW584	RUBBER GASKET		(H1+L3+L4)x4
DBA1-135	RUBBER GASKET		(H1x4)+((L3+L4)x2)
DBA1-136	RUBBER GASKET		(H1x4)+((L3+L4)x2)

ACCESSORIES & HARDWARE			
ARTICLE	DESCRIPTION	DRAWING	QTY
ACW81.894	CHEVRON		20
ACW81.881	CORNER CLEAT		8
ACW81.882	CORNER CLEAT		8
ACW81.886	CORNER CLEAT		8

RUBBER GASKET** - OPTIONAL

ACW81

ALUNET SYSTEMS

Example of combined estimation
Double opening with mullion
Standard flush frame ACW81.112 & standard frame ACW81.114

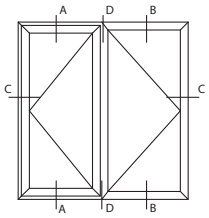

ACW81.114

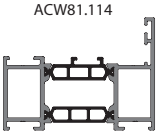

A-A/B-B

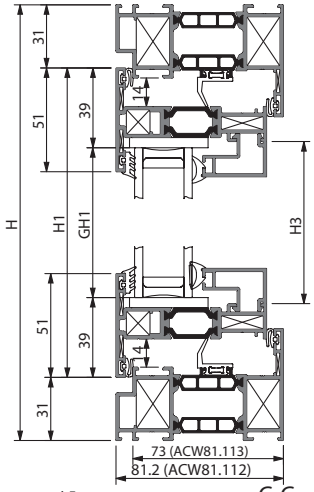

D-D

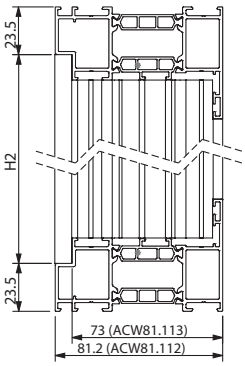

C-C

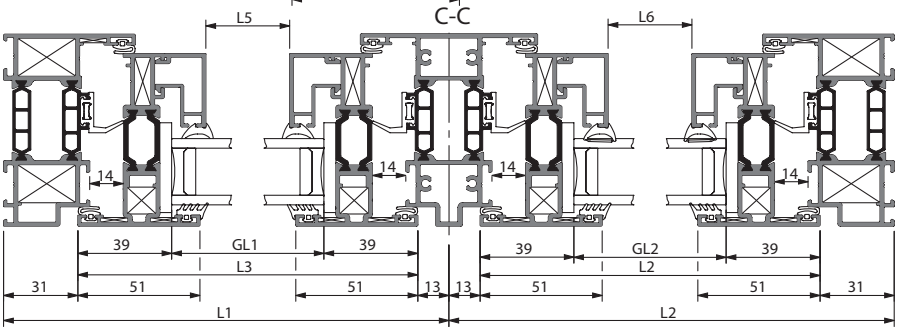

CUTTING DETAILS

ARTICLE	DESCRIPTION	DRAWING	END CUT	REFERENCE	QTY
ACW81.112 / ACW81.114	STANDARD FLUSH / STANDARD FRAME			L	2
				H	2
ACW81.221	SUPER SLIM SASH PROFILE			L3=L1-32	2
				L4=L2-32	2
				H1=H-38	4
ACW81.441	REBATE TRANSOM PROFILE			H2=H-24	1
ACW81.551	BEAD PROFILE			L5=L3-107	2
				H3=H1-72.4	4
				L6=L4-107	2
		GLASS	SASH 1	GL1=L3-78	1
				GH1=H1-78	
			SASH 2	GL2=L4-78	1
				GH1=H1-78	

GASKETS

ARTICLE	DESCRIPTION	DRAWING	QTY
DBA1-131R	RUBBER GASKET**		(2x(L3+L4))+(H1x2)
ACW584	RUBBER GASKET		(H1+L3+L4)x4
DBA1-135	RUBBER GASKET		(H1x4)+((L3+L4)x2)
DBA1-136	RUBBER GASKET		(H1x4)+((L3+L4)x2)

ACCESSORIES & HARDWARE

ARTICLE	DESCRIPTION	DRAWING	QTY
ACW81.894	CHEVRON		16
ACW81.882	CORNER CLEAT		8
ACW81.886	CORNER CLEAT		8
ACW81.883	CORNER CLEAT		8

RUBBER GASKET** - OPTIONAL

ACW81

ALUNET SYSTEMS

Example of combined estimation
Double top opening - fixed lights internally glazed
Slim flush frame ACW81.111 / slim standard frame ACW81.113

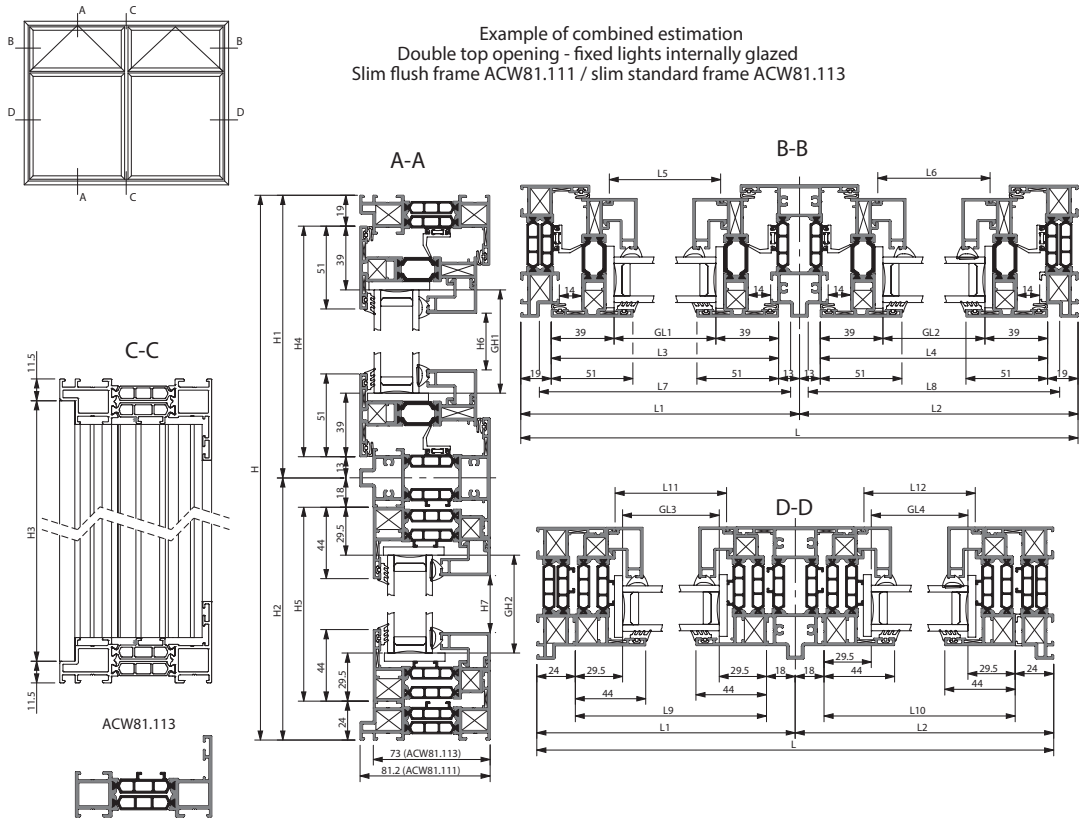

CUTTING DETAILS					
ARTICLE	DESCRIPTION	DRAWING	END CUT	REFERENCE	QTY
ACW81.111 ACW81.113	SLIM FLUSH / STANDARD SLIM FRAME			L	2
				H	2
ACW81.221	SUPER SLIM SASH PROFILE			L3=L1-32	4
				H1=H-38	4
ACW81.441	REBATE TRANSOM PROFILE			H2=H-24	2
ACW81.331	ADAPTOR PROFILE			L4=L2-36	2
				H3=H-48	2
ACW81.551	BEAD PROFILE			L5=L3-107	4
				H4=H1-72.4	4
				L6=L4-84.4	2
				H5=H3-49.8	2
		GLASS	SASH	GL1=L3-78 GH1=H4-78	1
				GL2=L4-78 GH1=H4-78	1
			FIXED FRAME	GL3=L9-59 GH2=H5-59	1
				GL4=L10-59 GH2=H5-59	1

ACCESSORIES & HARDWARE			
ARTICLE	DESCRIPTION	DRAWING	QTY
ACW81.894	CHEVRON		28
ACW81.881	CORNER CLEAT		16
ACW81.882	CORNER CLEAT		16
ACW81.886	CORNER CLEAT		8
ACW81.885	SASH CLEAT		8
ACW81.893W+/ ACW81.893BL	DRAINAGE CAP		4

GASKETS			
ARTICLE	DESCRIPTION	DRAWING	QTY
DBA1-131R	RUBBER GASKET**		(H4x4)+L3+L4
ACW584	RUBBER GASKET		(H1+L3+L4)x4
DBA1-135	RUBBER GASKET		(H4+H5)x4+(L3+L4)x2
DBA1-136	RUBBER GASKET		(H4+H5)x4+(L3+L4)x2

RUBBER GASKET** - OPTIONAL

ACW81

ALUNET SYSTEMS

Example of combined estimation
Double top opening - fixed lights internally glazed
Standard flush frame ACW81.112 / standard frame ACW81.114

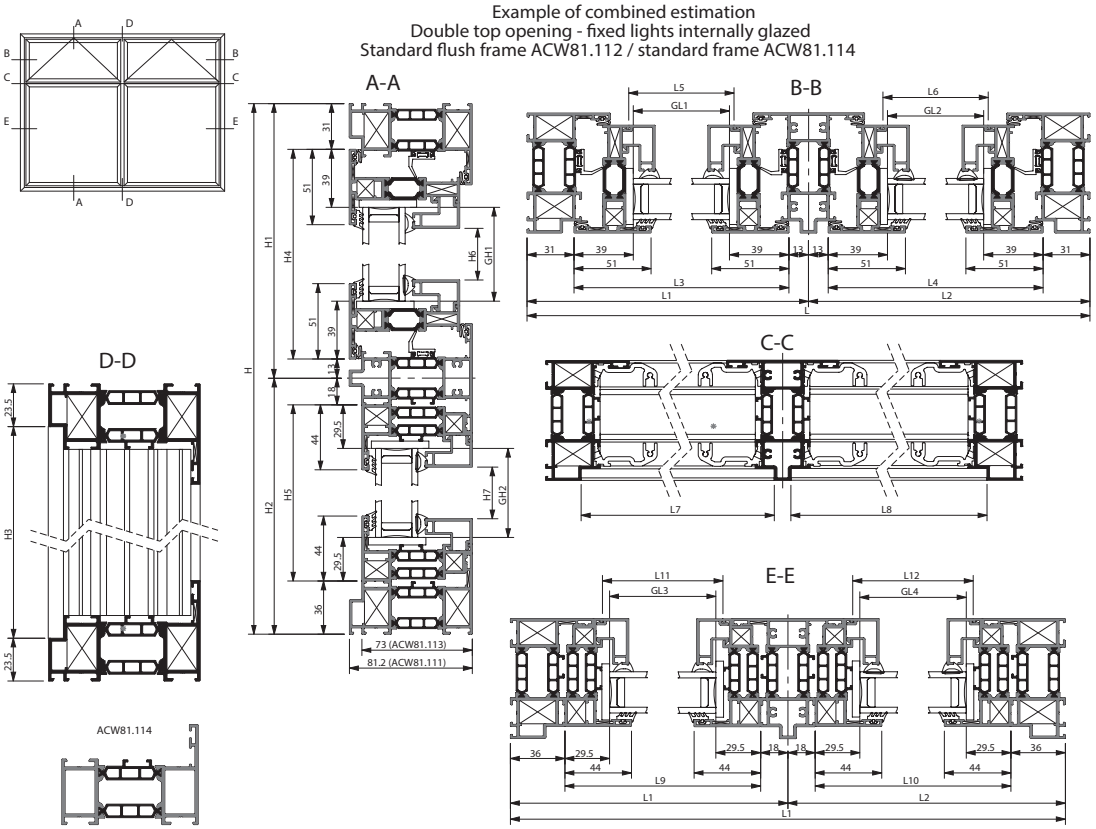

CUTTING DETAILS					
ARTICLE	DESCRIPTION	DRAWING	END CUT	REFERENCE	QTY
ACW81.112 / ACW81.114	STANDARD FLUSH FRAME / STANDARD FRAME			L	2
				H	2
ACW81.221	SUPER SLIM SASH PROFILE			L3=L1-32	4
				H1=H-38	4
ACW81.441	REBATE TRANSOM PROFILE			H2=H-24	2
ACW81.331	ADAPTOR PROFILE			L4=L2-36	2
				H3=H-48	2
ACW81.551	BEAD PROFILE			L5=L3-107	4
				H4=H1-72,4	4
				L6=L4-84,4	2
				H5=H3-49,8	2
		GLASS	SASH	GL1=L3-78 GH1=H4-78	1
				GL2=L4-78 GH1=H4-78	1
			FIXED FRAME	GL3=L9-59 GH2=H5-59	1
				GL4=L10-59 GH2=H5-59	1

ACCESSORIES & HARDWARE			
ARTICLE	DESCRIPTION	DRAWING	QTY
ACW81.894	CHEVRON		28
ACW81.881	CORNER CLEAT		8
ACW81.882	CORNER CLEAT		16
ACW81.886	CORNER CLEAT		8
ACW81.885	SASH CLEAT		8
ACW81.883	CORNER CLEAT		8
ACW81.893WH ACW81.893BL	DRAINAGE CAP		4

GASKETS			
ARTICLE	DESCRIPTION	DRAWING	QTY
DBA1-131R	RUBBER GASKET**		(H4x4)+L3+L4
ACW584	RUBBER GASKET		(H4+L3+L4)x4
DBA1-135	RUBBER GASKET		(H4+H5)x4+(L3+L4)x2
DBA1-136	RUBBER GASKET		(H4+H5)x4+(L3+L4)x2

RUBBER GASKET** - OPTIONAL

04 Corner Processing Drainage Details General Fabrication

ACW81

ALUNET SYSTEMS

Mechanical Corner connection of profiles

Slim Flush / Slim standard Frame corner connection ACW81.111 /ACW81.113

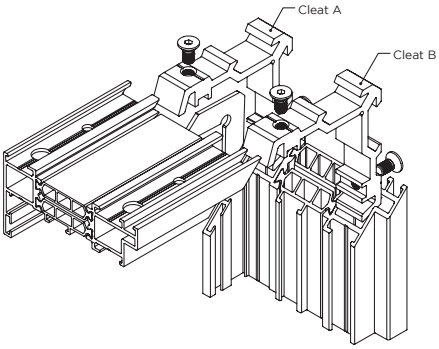

Cleat A	Cleat B
ACW81.881	ACW81.881

Standard Flush / standard Frame corner connection ACW81.112 / ACW81.114

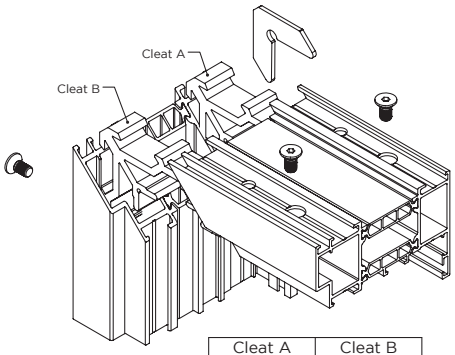

Cleat A	Cleat B
ACW81.883	ACW81.883

Sash corner connection ACW81.221

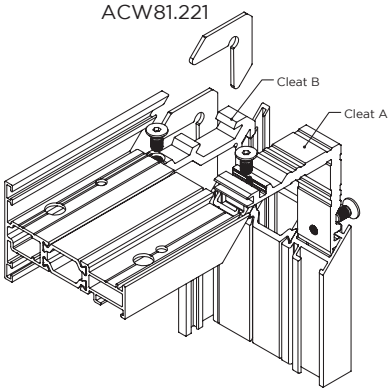

Cleat A	Cleat B
ACW81.886	ACW81.882

Adaptor corner connection ACW81.331

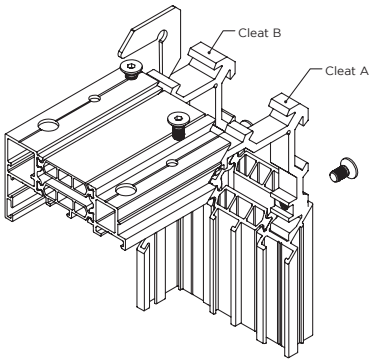

Cleat A	Cleat B
ACW81.882	ACW81.881

Transom connection ACW81.442

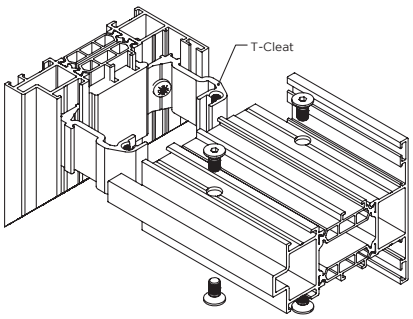

T-Cleat
ACW81.885

Transom connection ACW81.444

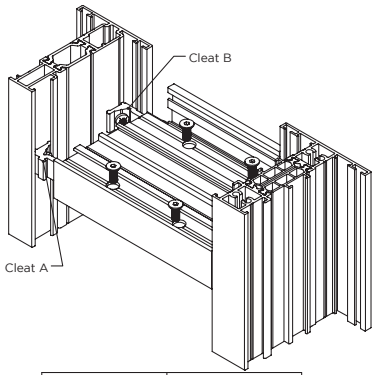

Cleat A	Cleat B
ACW81.884	ACW81.887

ACW81

ALUNET SYSTEMS

ACW81.221 Sash corner connection with screws

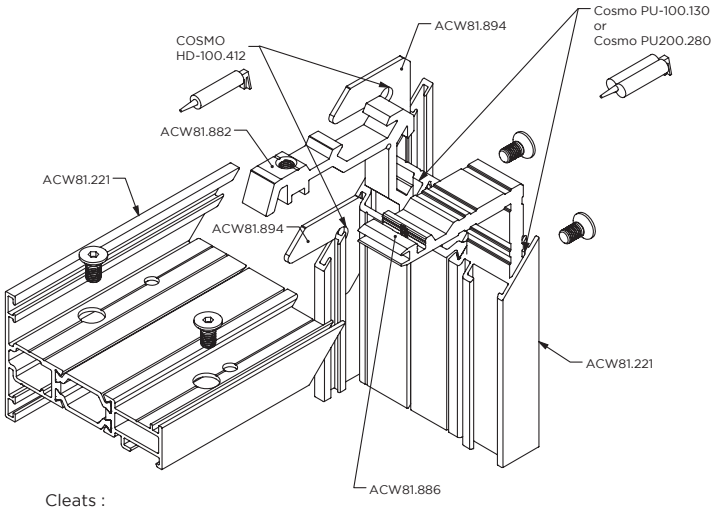

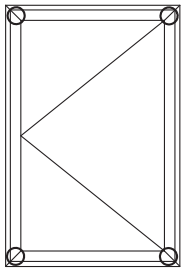

Cleats :
ACW81.882
ACW81.886
Chevron : ACW81.894

Processing sash profile corner connection with screws

Use jig WIN.JIG1 or
PH1 Station 6 & 7
to prepare sash profiles

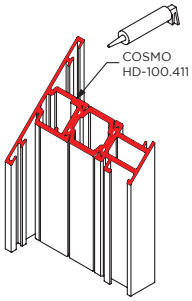

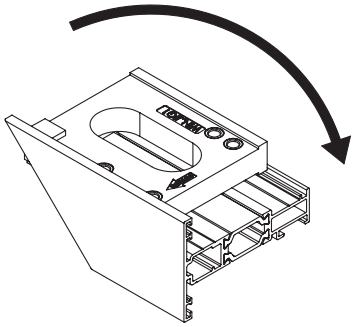

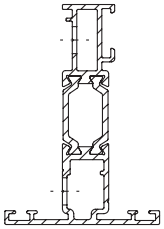

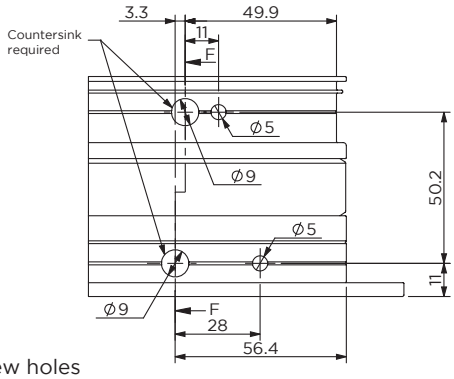

Use 5mm pilot drill, open out screw holes
using 9mm drill bit - countersink screw holes

ACW81

ALUNET SYSTEMS

ACW81.111 / ACW81.113 & ACW81.112 / ACW81.114 outer frame corner connction with screws

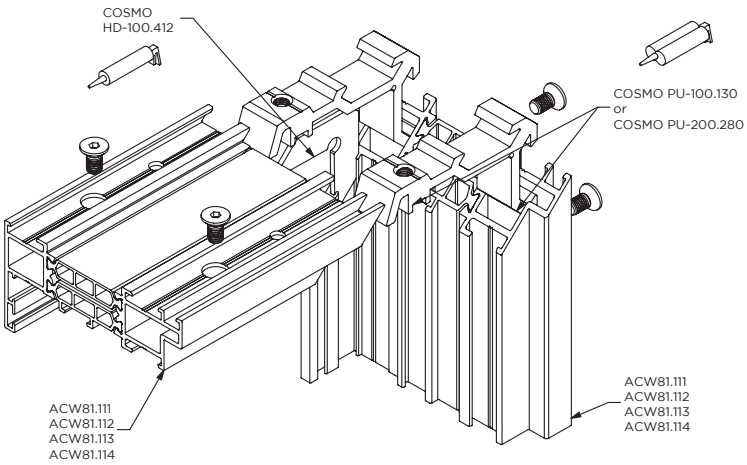

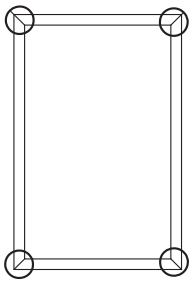

ACW81.111 / ACW81.113
Cleats : ACW81.881
Chevron : ACW81.894

ACW81.112 /ACW81.114
Cleats : ACW81.883
Chevron : ACW81.894

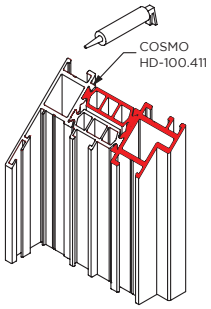

Use jig WIN.JIG2
or PH1 Station 1 & 2
to prepare frame profiles

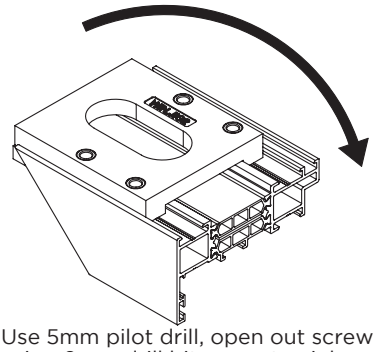

Use 5mm pilot drill, open out screw holes
using 9mm drill bit - countersink screw holes

ACW81.111/ACW81.112 ACW81.113/ACW81.114 Outer frame corner preparation

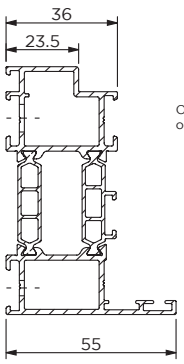

ACW81.112
ACW81.114

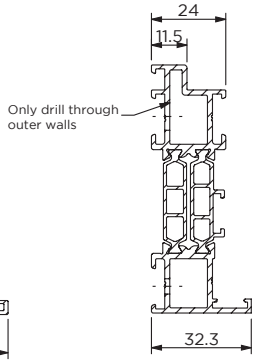

ACW81.111
ACW81.113

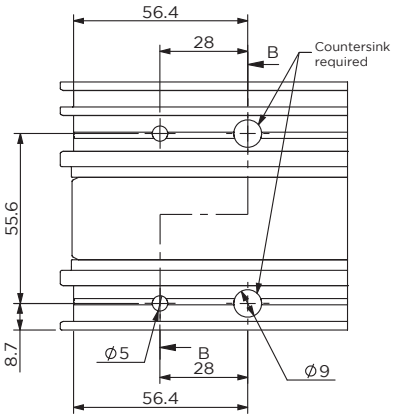

04.03

ACW81

ALUNET SYSTEMS

ACW81.331 Reverse rebate Adaptor corner connection with screws

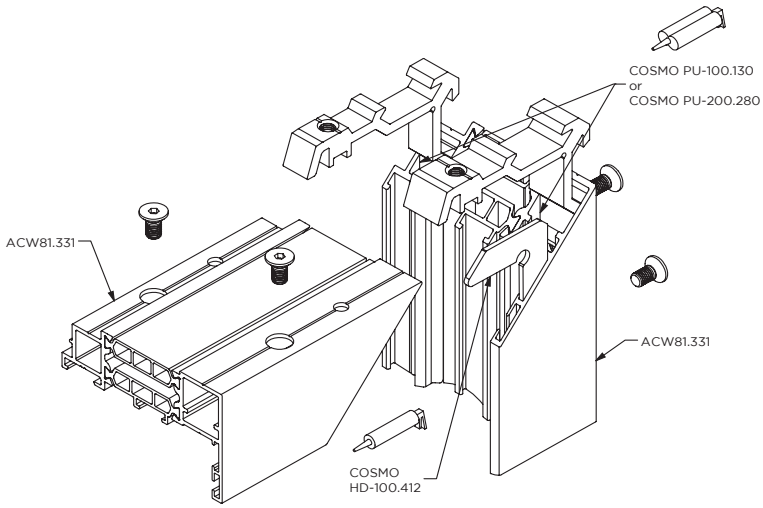

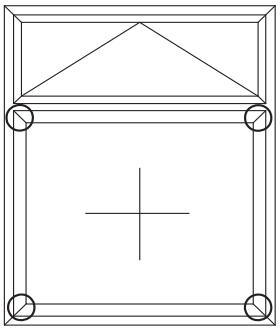

Cleats :
ACW81.881
ACW81.882
Chevron : ACW81.894

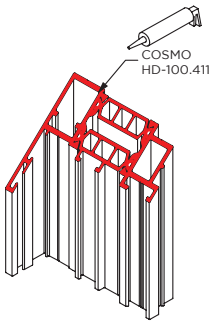

Use jig WIN.JIG3 or
PH1 Station 3
to prepare sash profiles

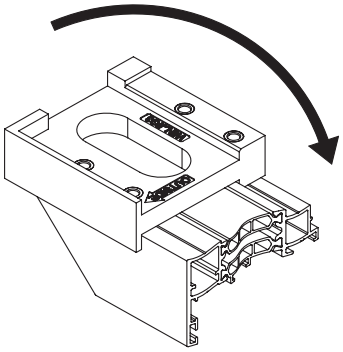

Processing adaptor profile corner connection with screws

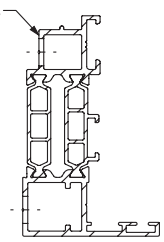

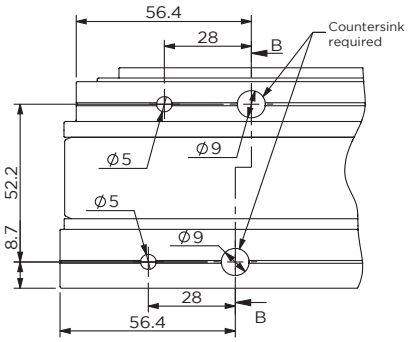

Use 5mm pilot drill,
open out 2 screw holes using 9mm drill
countersink screw holes

ACW81

ALUNET SYSTEMS

T- Connection of outer frame & transom profiles
Screw Fix

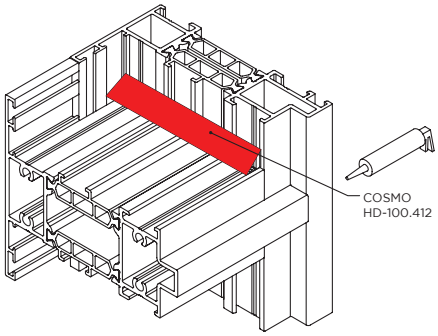

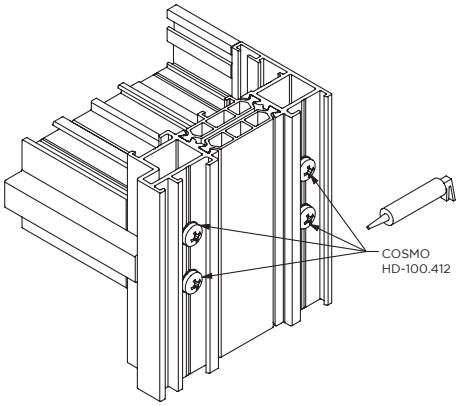

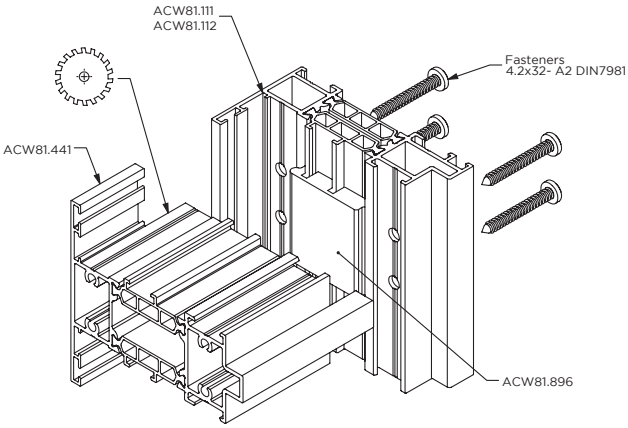

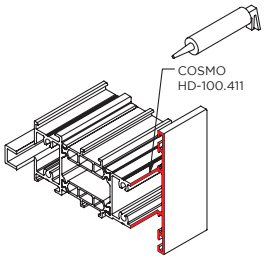

Transom profile processing
ACW81.441

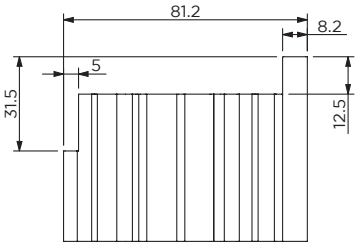

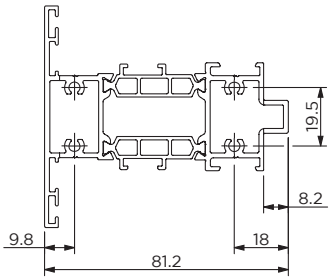

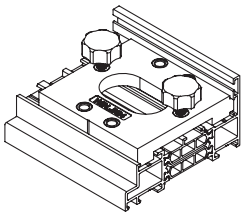

Use jig WIN.JIG4
to prepare
Frame profiles

Outer frame profile processing
ACW81.111+ACW81.441
ACW81.112+ACW81.441

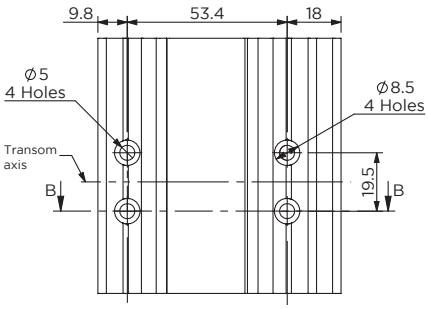

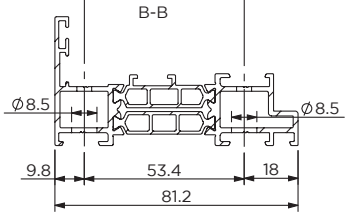

Use 5mm pilot drill,
open out 4 screw holes using 8.5mm drill
on outside face only

ACW81

ALUNET SYSTEMS

T- Connection of outer frame ACW81.113 /ACW81.114 & transom profile ACW81.445 - Screw Fix

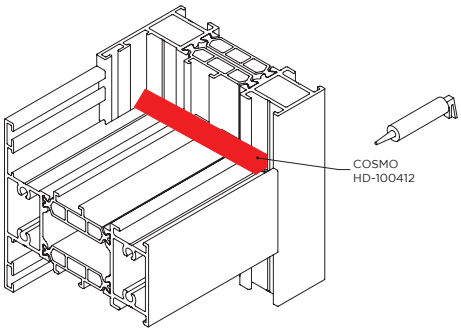

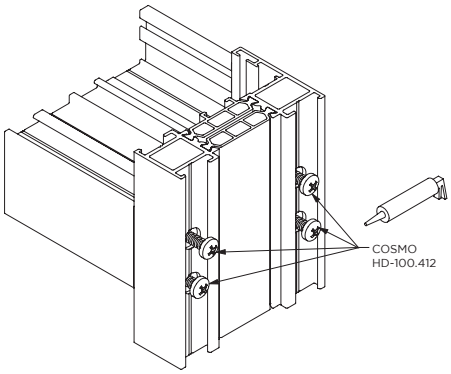

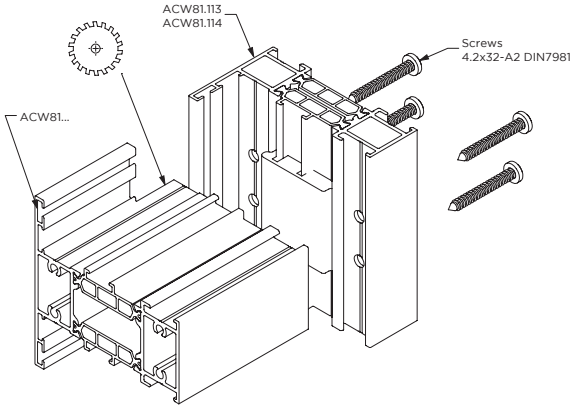

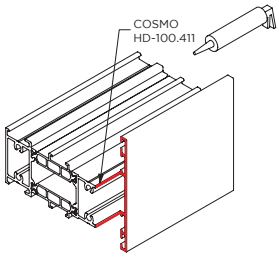

Transom profile processing

Outer frame profile processing
ACW81.111+ACW81.445
ACW81.112+ACW81.445

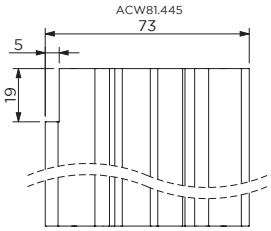

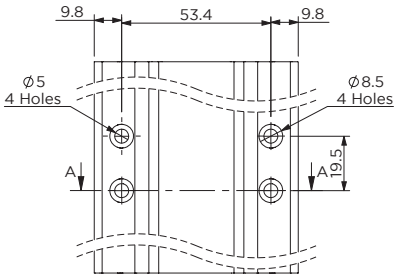

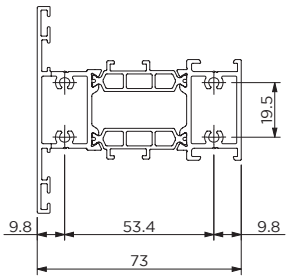

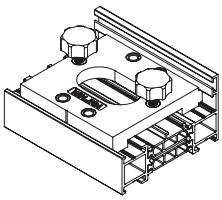

Use jig WIN.JIG4
to prepare
Frame profiles

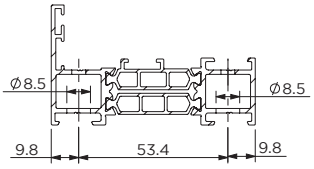

Use 5mm pilot drill,
open out 4 screw holes using 8.5mm drill
on outside face only

ACW81

ALUNET SYSTEMS

T- Connection of outer frame ACW.111 / ACW81.112
& transom profile ACW81.412 - using Cleats

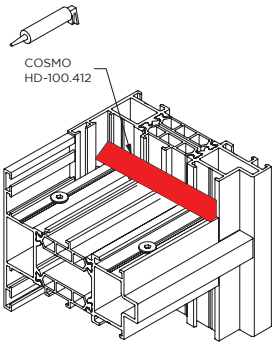

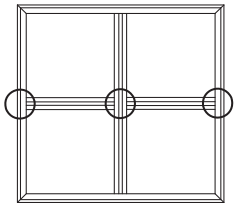

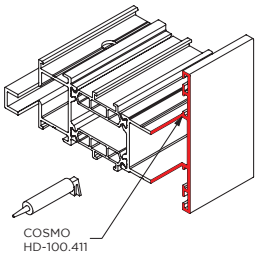

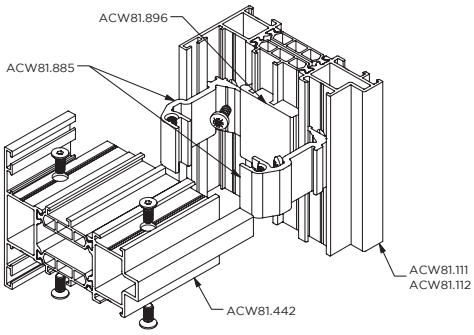

Transom profile processing
ACW81.442

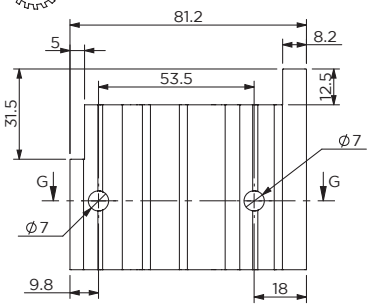

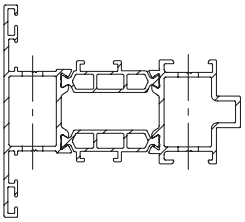

Use jig WIN.JIG5 or
PH1 Station 5
to prepare both ends
of Transom profiles

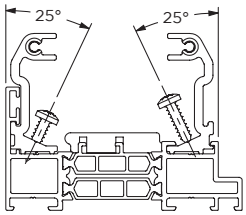

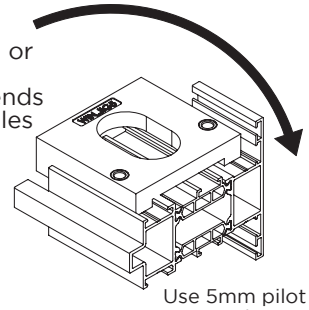

Use 5mm pilot drill,
open out screw holes
using 7mm drill

ACW81

ALUNET SYSTEMS

T- Connection of outer frame ACW81.113 / ACW81.114
& transom profile ACW81.446 - using Cleats

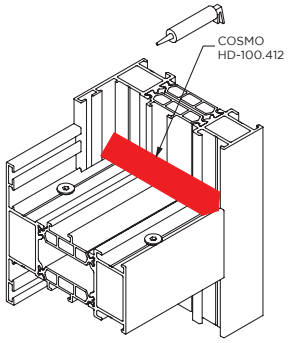

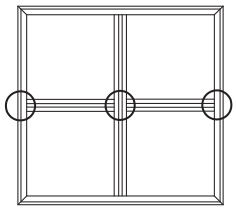

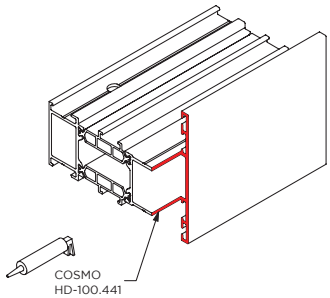

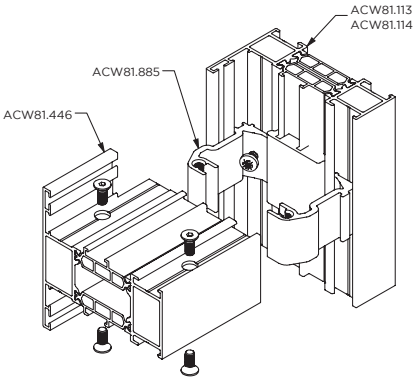

Transom profile processing
ACW81.442

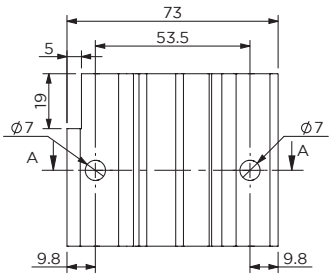

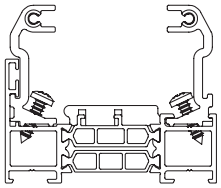

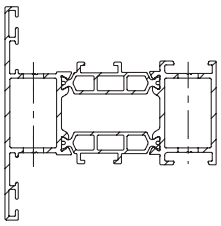

Use jig WIN.JIG5 or
PH1 Station 5
to prepare both ends
of Transom profiles

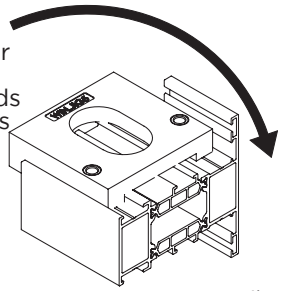

Use 5mm pilot drill,
open out screw holes
using 7mm drill

04.08

ACW81

ALUNET SYSTEMS

T- Connection of sash & transom profile

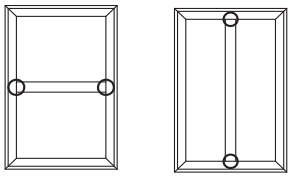

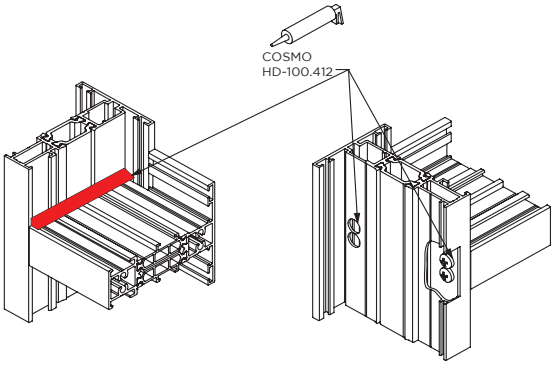

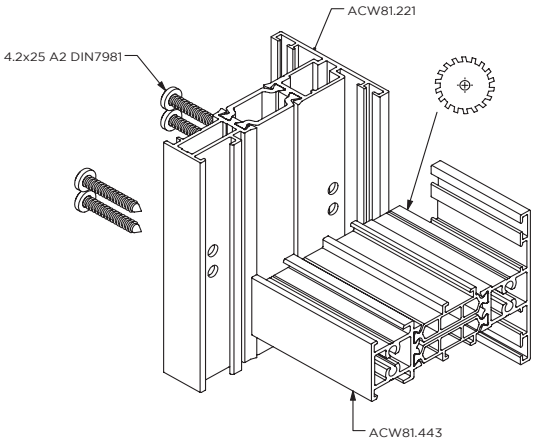

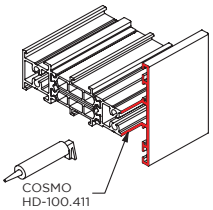

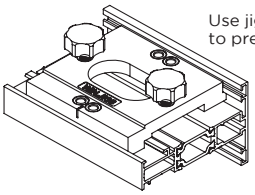

Use jig WIN.JIG6
to prepare SASH profiles

Note : Transom profile ACW81.443 axis should not fall within the gearbox zone for espag

Transom profile processing

ACW81.443

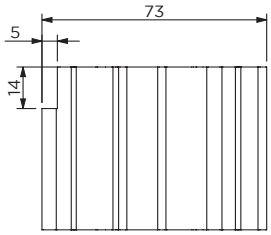

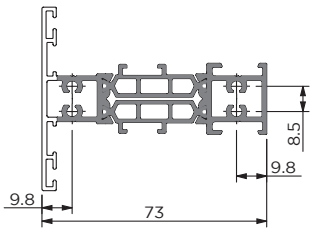

Sash profile processing

ACW81.221

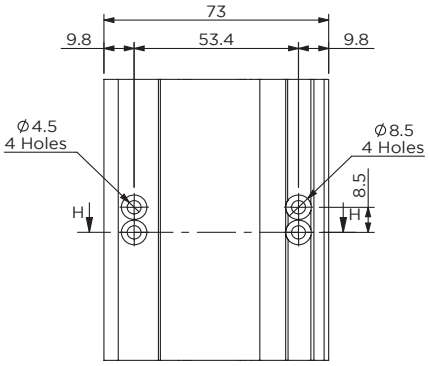

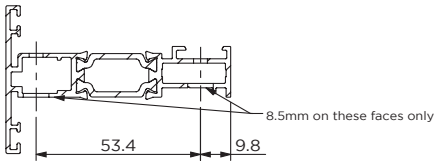

Use 4.5mm drill, open out 4 screw holes
using 8.5mm drill on outer face only

ACW81

ALUNET SYSTEMS

Drainage processing. Internally glazed
For Outer frame profile ACW81.111/ACW81.113 & Sash ACW81.221

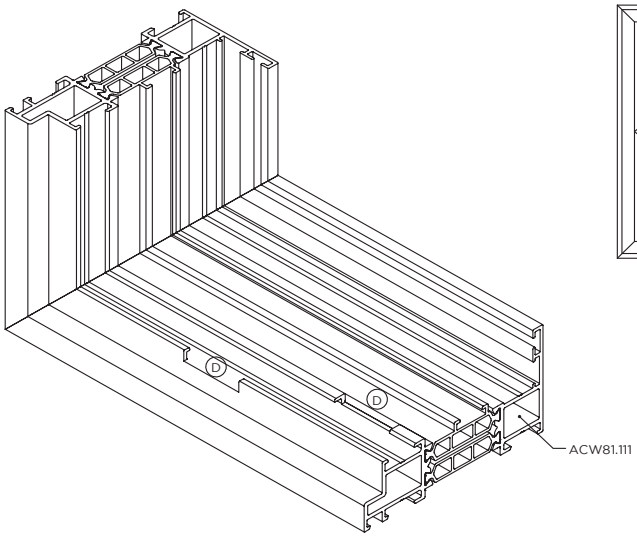

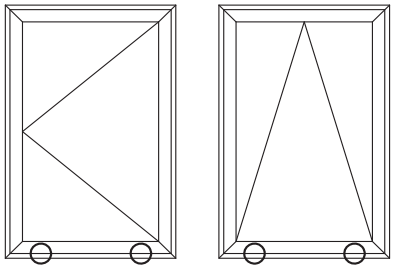

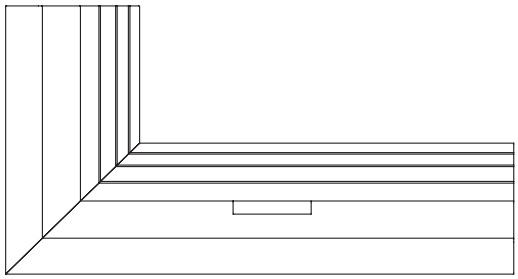

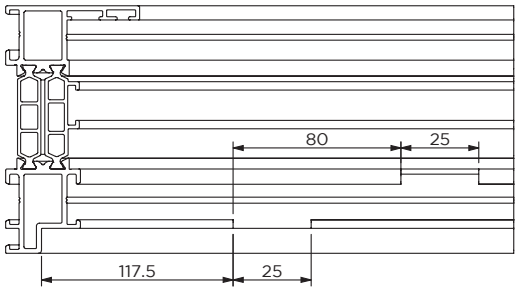

For processing (D) use PH1 Station 4
or manually cut

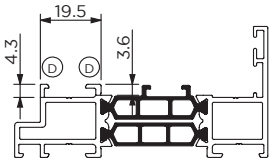

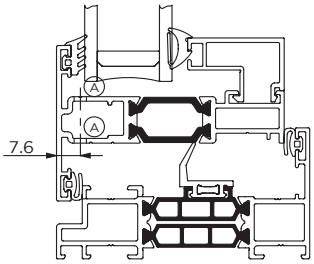

04.10

ACW81

ALUNET SYSTEMS

Drainage processing. Internally glazed
For Outer frame profile ACW81.112/ACW81.114

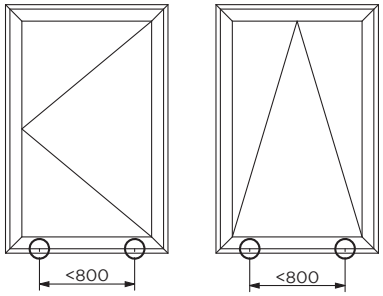

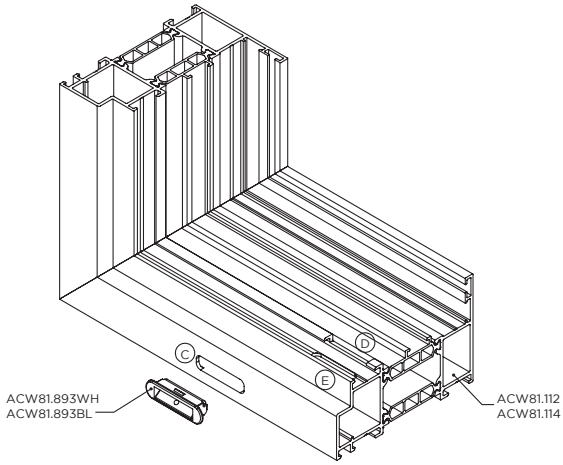

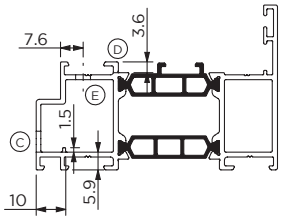

ACW81.112

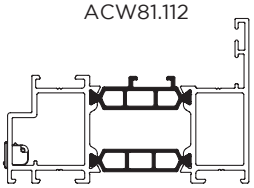

ACW81.114

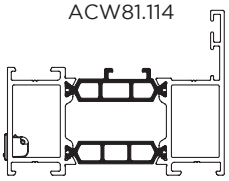

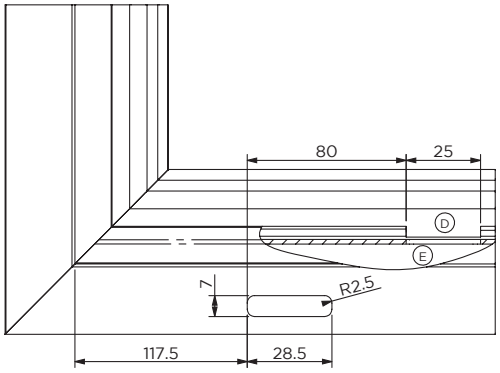

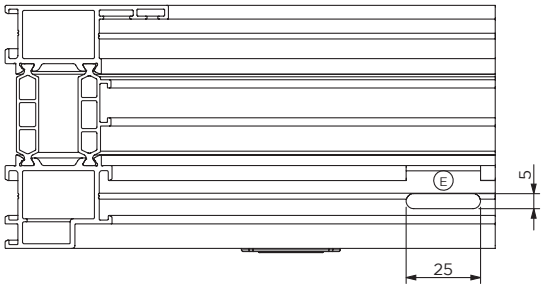

04.11

ACW81

ALUNET SYSTEMS

Drainage & ventilation hole processing in ACW81.221 sash profile

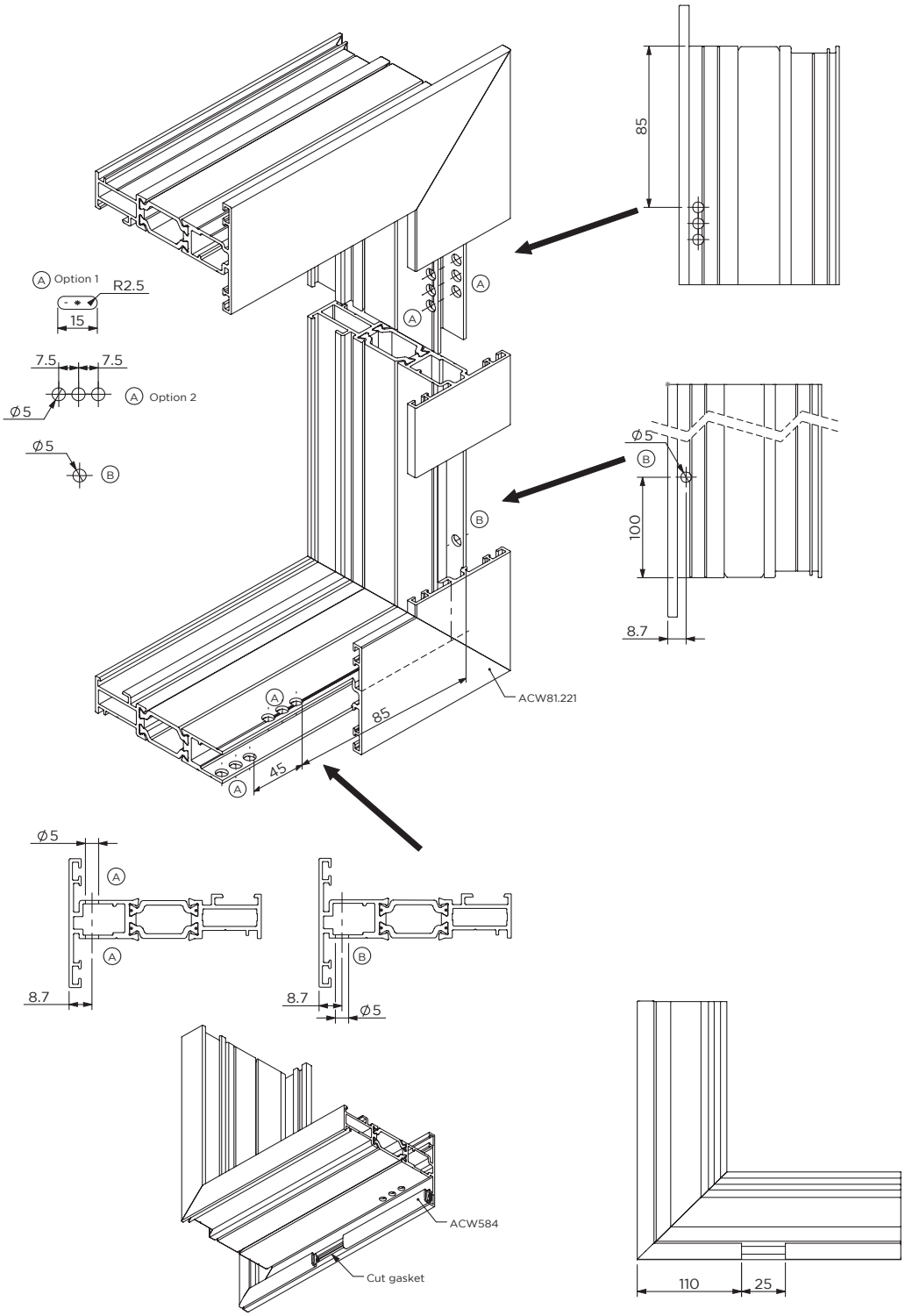

04.12

ACW81

ALUNET SYSTEMS

Drainage processing in Transom profiles
ACW81.441 & ACW81.442

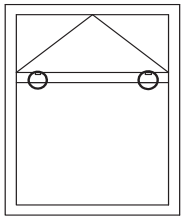

Use PH1 Station 4

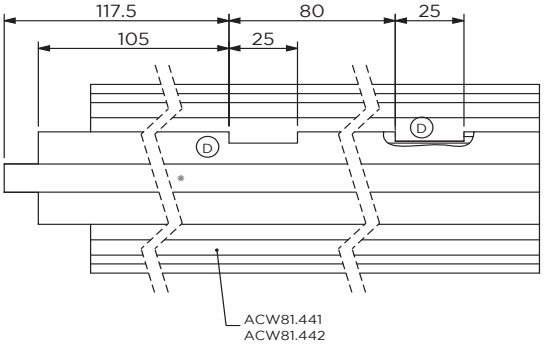

ACW81.442

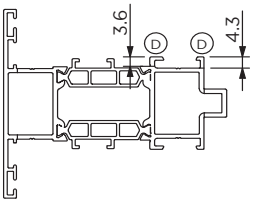

ACW81.441
Process same as ACW81.442

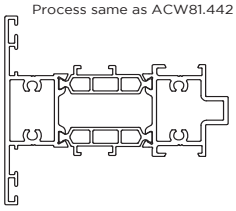

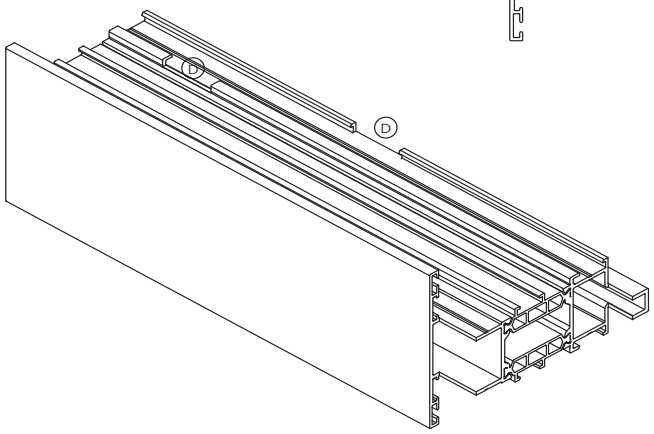

04.13

ACW81

ALUNET SYSTEMS

Drainage processing in Adaptor profile ACW81.331

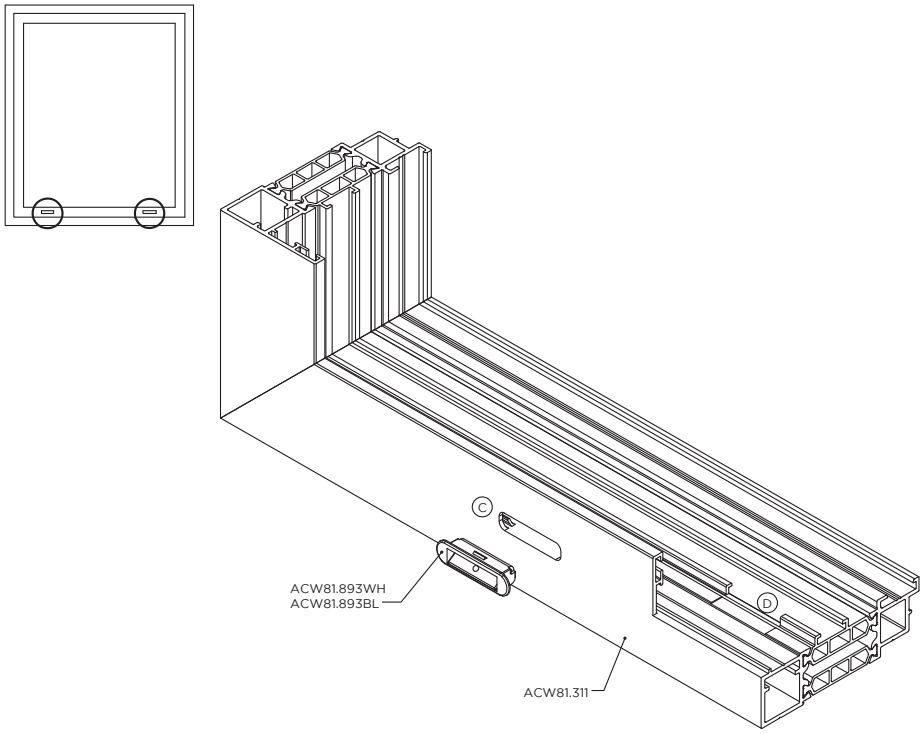

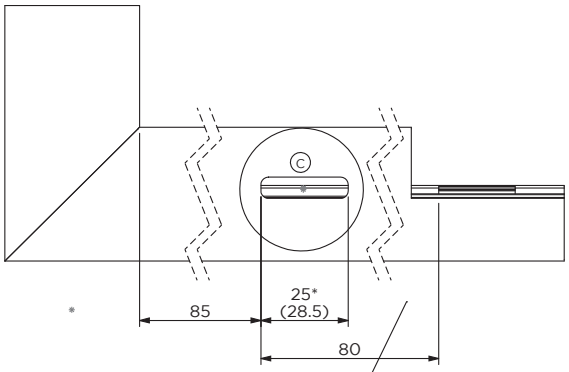

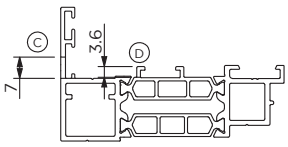

* Punch tool

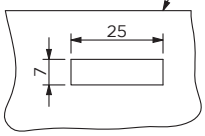

Drainage Cap punch Detail

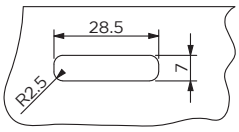

Drainage Cap CNC Detail

04.14

ACW81

ALUNET SYSTEMS

Drainage processing in Frame / Bead profile - Externally Glazed

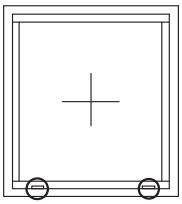

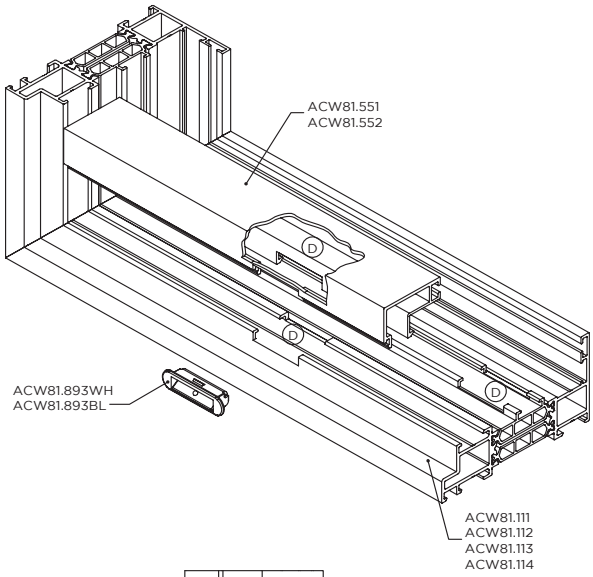

ACW81.111
ACW81.113

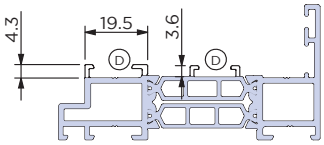

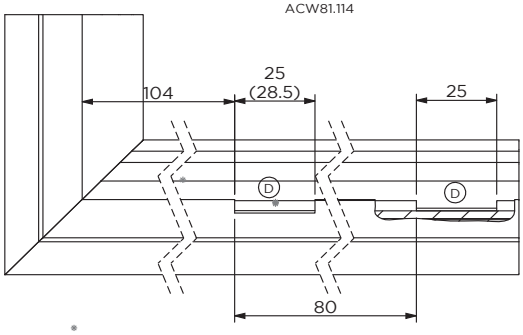

ACW81.112
ACW81.114

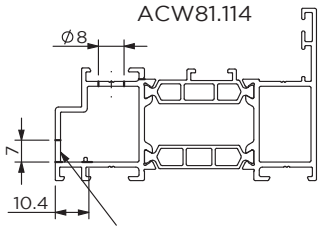

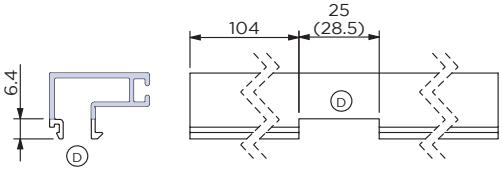

If using CNC 5mm bit cut overall slot length at 28.5mm

NOTE: For ACW81.112/ACW81.114 drainage cap ACW81.893BL/WH can be used instead of cutting glazing bead

05 Hardware Installation Details

ACW81

ALUNET SYSTEMS

Espag & inline handle installation on ACW81.221 sash

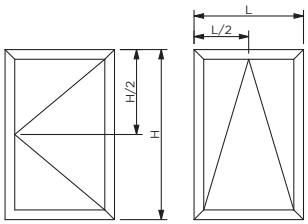

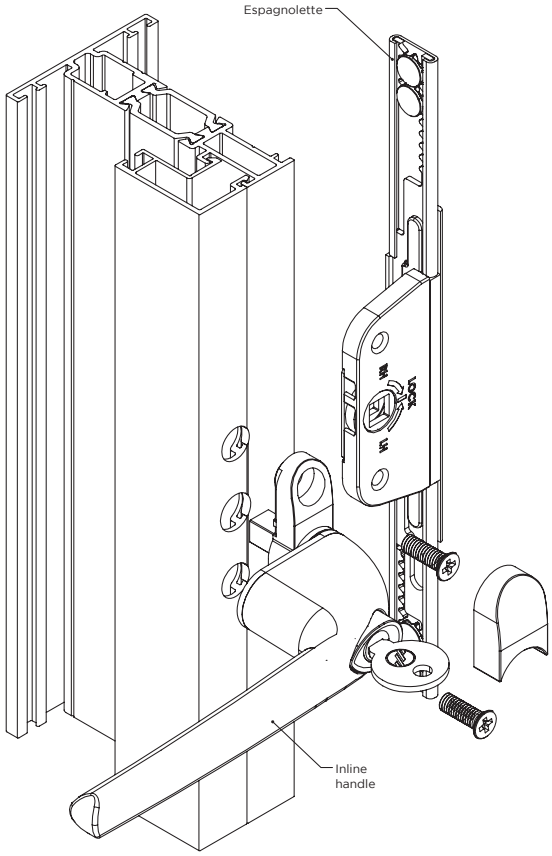

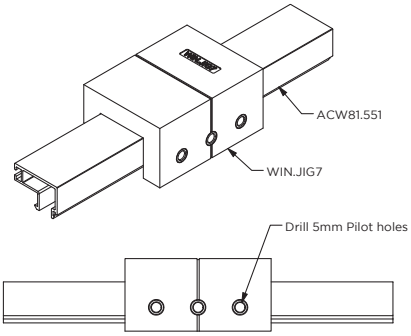

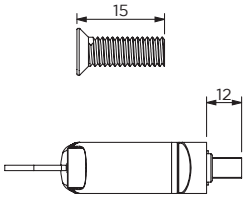

Max length of spindle - 12mm
Max length of fixing screws - 15mm
Cut to length before fitting if required

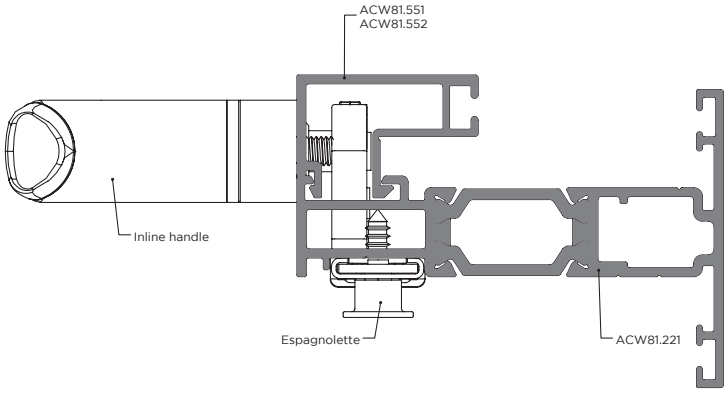

Sash transom/mullion must be offset by 50mm - lock prevents fitment on centre line

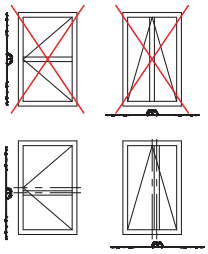

ACW81

ALUNET SYSTEMS

Glazing bead profile machining detail

Bead profile machining detail for
espagnolette lock
Using Jig WIN.JIG7

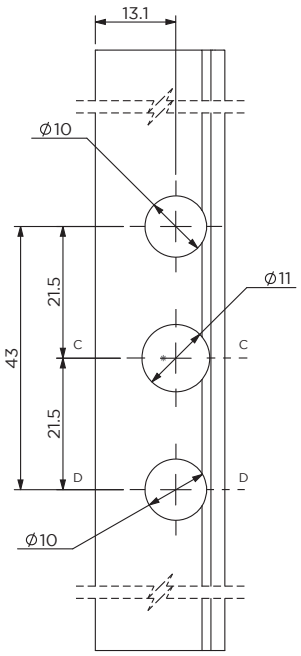

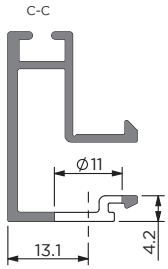

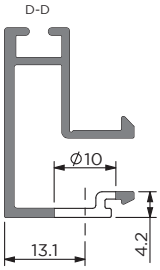

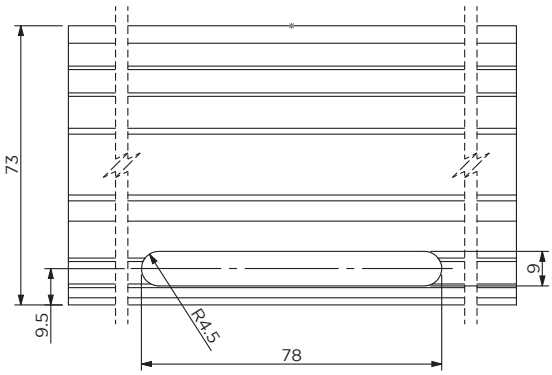

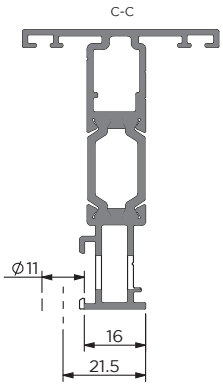

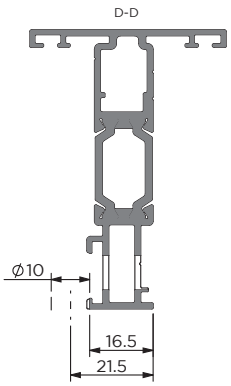

Notch out the sash profile as shown
to allow fitting of espagnolette handle

ACW81

ALUNET SYSTEMS

Espagnolette handing - installation Detail

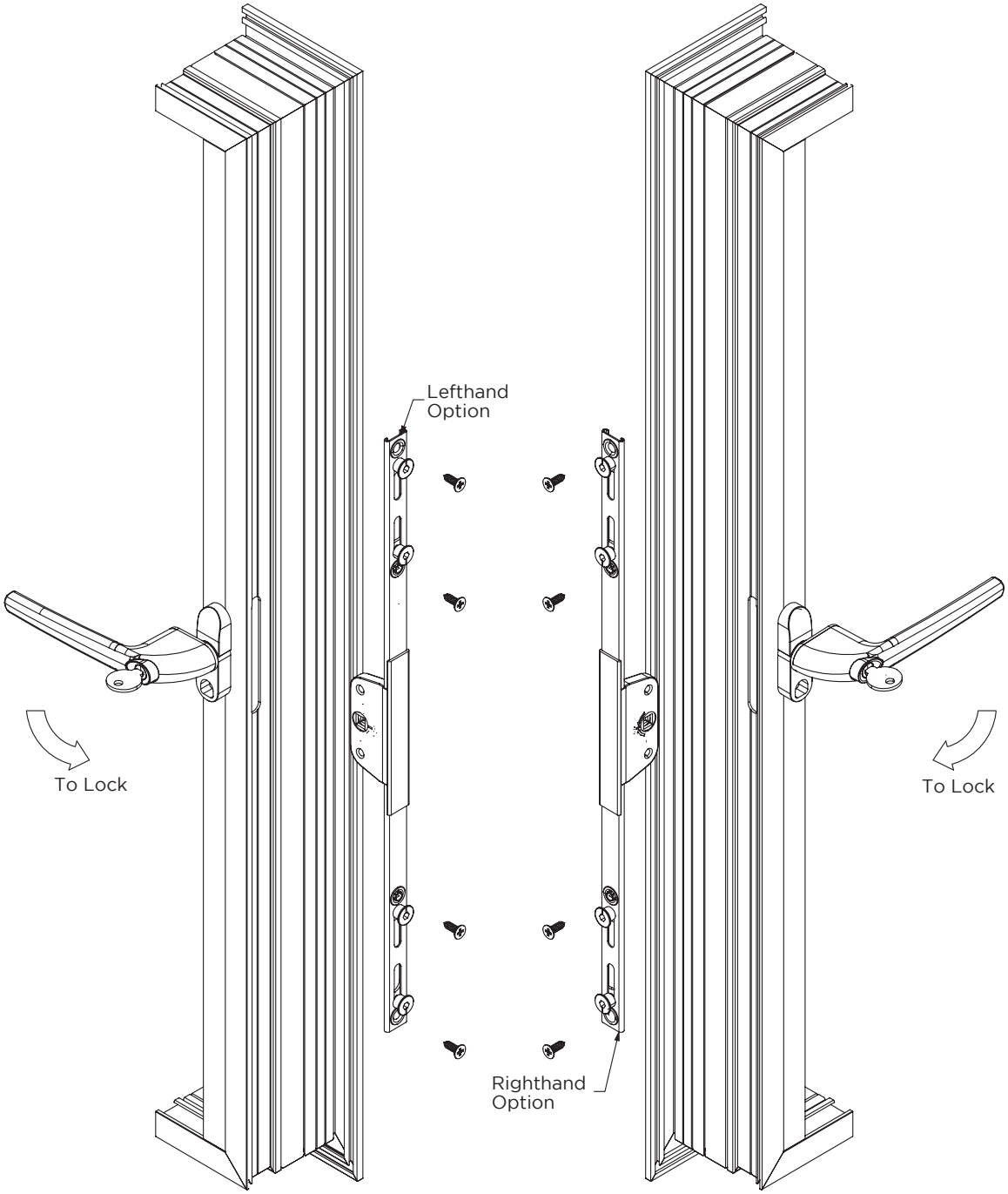

05.03

ACW81

AVALUNET SYSTEMS

Espag installation Detail

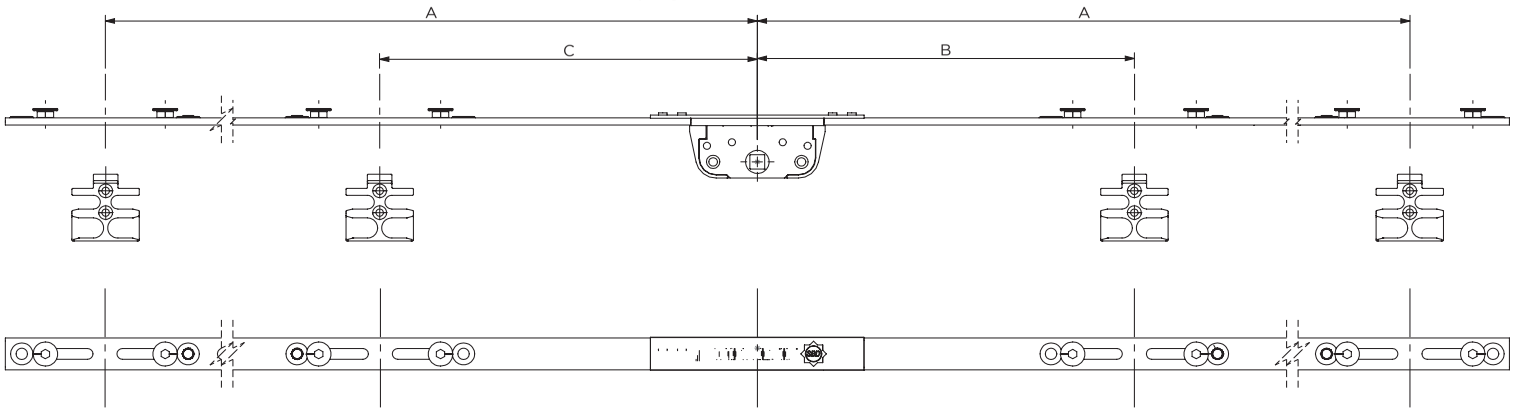

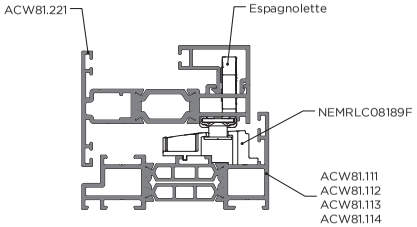

	NEM280207 (LH/RH)	NEM400207 (LH/RH)	NEM550207 (LH/RH)	NEM700207 (LH/RH)	NEM850207 (LH/RH)	NEM1000207 (LH/RH)	NEM1150207 (LH/RH)	NEM1300207 (LH/RH)
	LOCK LENGTH mm							
	280	400	550	700	850	1000	1150	1300
	QUANTITY OF STRIKE PLATES							
	2	2	2	2	2	3	3	4
	DISTANCE TO STRIKE PLATE CENTRE							
A	151.5	151.5	226.5	301.5	376.5	451.5	526.5	601.5
B	-	-	-	-	-	108	108	183.5
C	-	-	-	-	-	-	-	183.5

Espagnolette sizing chart								
Item	NEM280207	NEM400207	NEM550207	NEM700207	NEM850207	NEM1000207	NEM1150207	NEM1300207
Sash size	340mm-459mm	460mm-609mm	610mm-759mm	760mm-909mm	910mm-1059mm	1060mm-1209mm	1210mm-1359mm	1360mm-1500mm

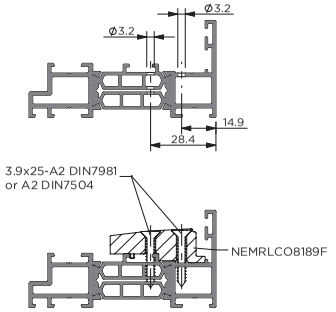

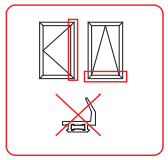

Select suitable length espagnolette to allow 50-60mm gap from end of sash

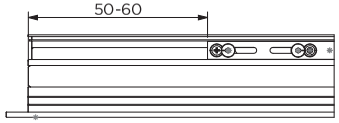

Espag Installation Detail

ACW81

ALUNET SYSTEMS

Fitting of friction stay to sash ACW81.221 & frame ACW81.111 / ACW81.112

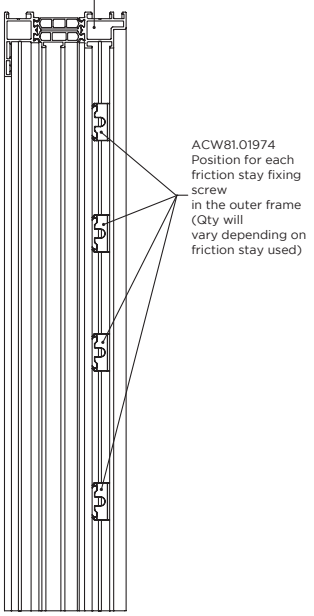

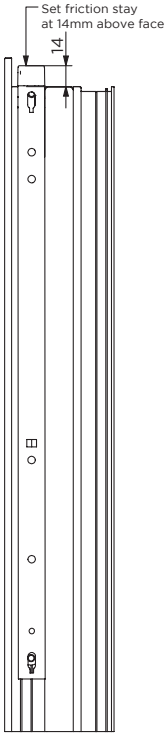

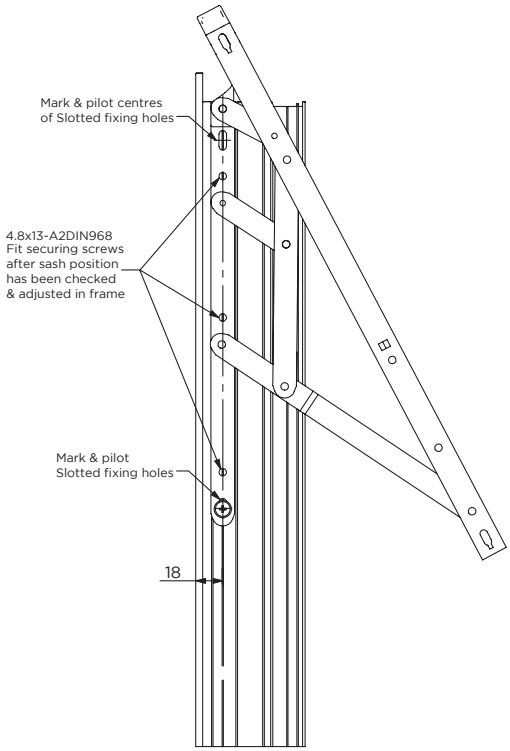

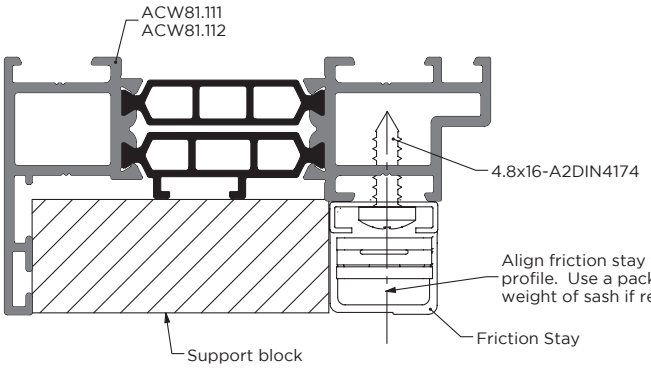

Product code	Size	Vent size (WxH)	Max weight (kg)	
KT08	8″	1200x350	12	TOP HUNG STAYS
KT10	10″	1200x500	14	
KT16	16″	1200x800	20	
KT20	20″	1200x900	24	
KT24	24″	1200x1000	27	
022624	24″ HD	1500x1500	50	
KS12	12″	600x1200	22	SIDE HUNG STAYS
KS16	16″	650x1200	24	
022852	12″ Egress	700x1300	30	
022856	16″ Egress	900x1500	40	
022836	16″ HD	900X1500	40	

ACW81

ALUNET SYSTEMS

Fitting of friction stay protector to sash ACW81.221 & frame ACW81.111 / ACW81.112/ACW81.113 / ACW81.114 - PAS24 Windows

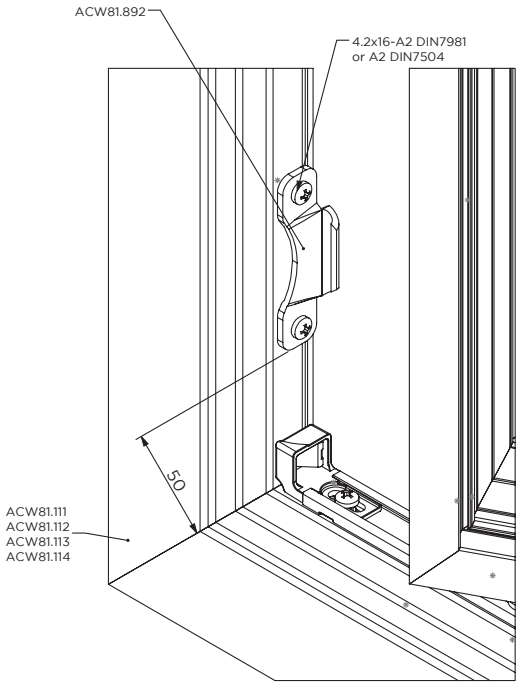

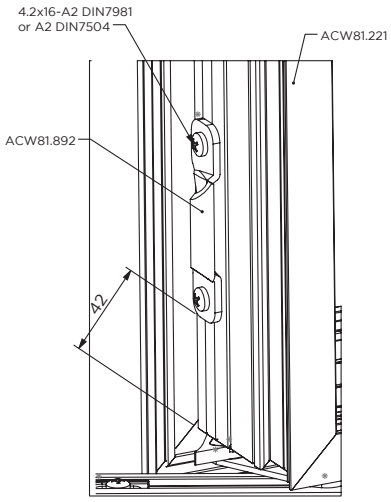

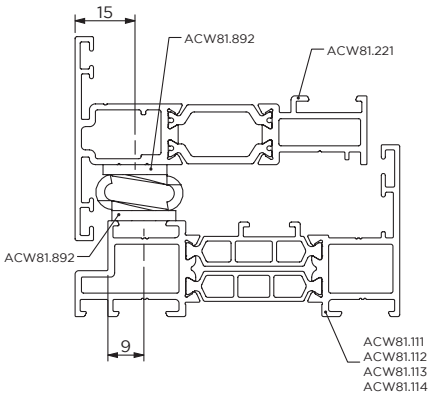

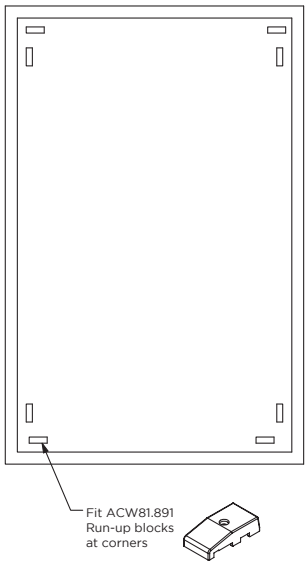

05.06

ACW81

ALUNET SYSTEMS

Connecting ACW81 outer frames

Number of connectors required is dependant on frame length
connectors should be at 500mm spacing - maximum

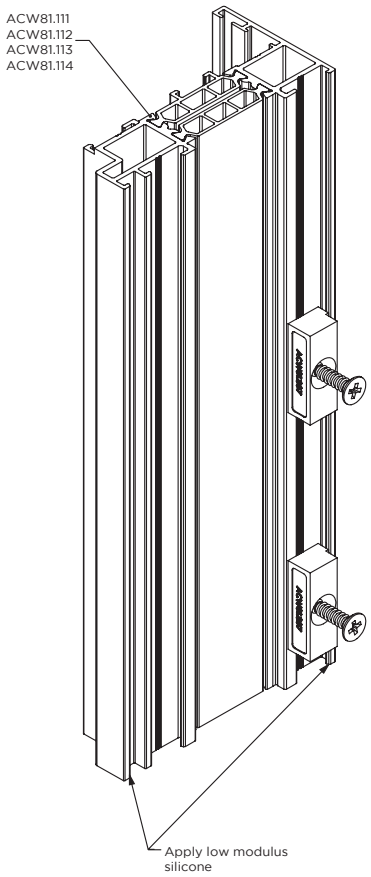

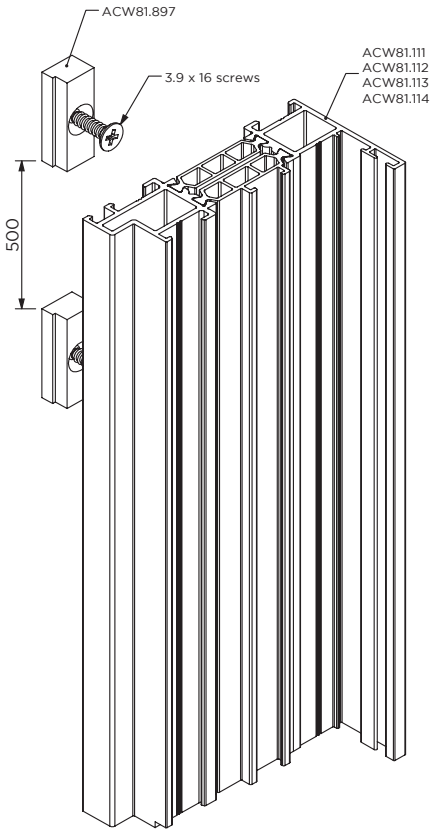

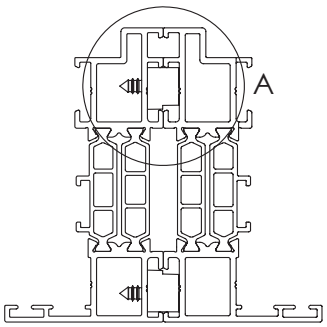

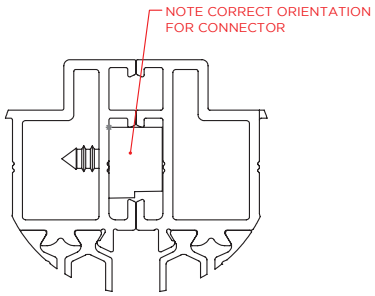

05.07

ACW81

ALUNET SYSTEMS

Connecting ACW81 outer frames to BF73 outer frame

Number of connectors required is dependant on frame length
connectors should be at 500mm spacing - maximum

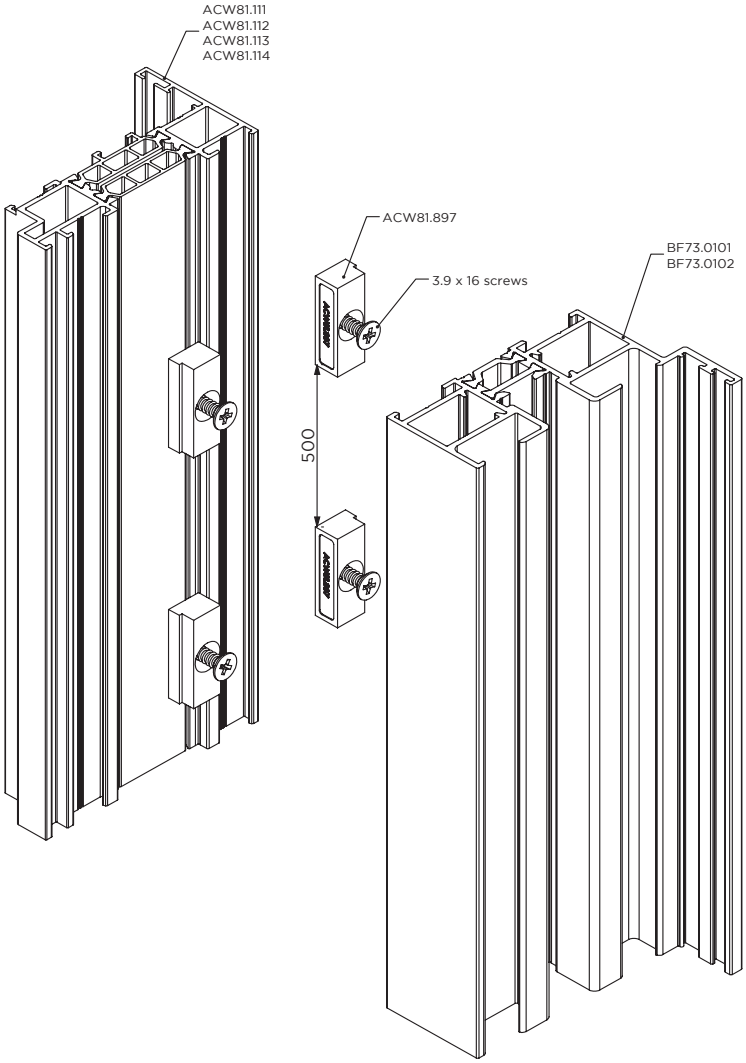

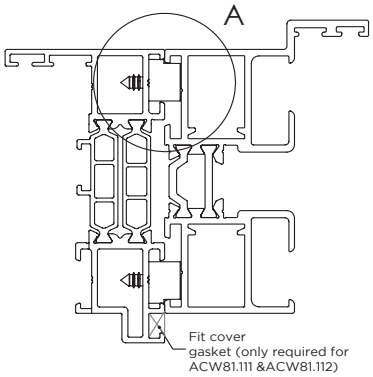

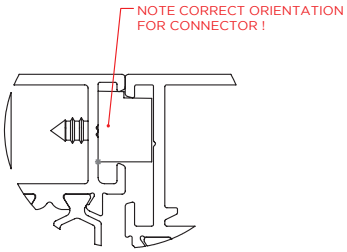

05.08

ALUNET
SYSTEMS

01924 350 110
info@alunetsystems.co.uk
www.alunetsystems.co.uk